CE

TPM 087/12

Revision 7
Valid from 10/12/20

EN 12101-8

MANDÍK®

SMOKE EXTRACTION DAMPER - MULTI

SEDM

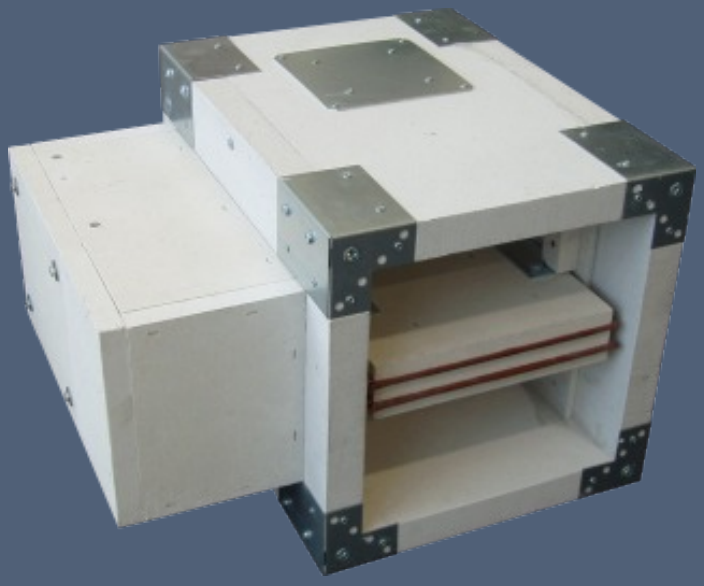

These technical specifications state a row of manufactured sizes and models of smoke extraction dampers - multi (further only dampers) SEDM. It is valid for production, designing, ordering, delivery, maintenance and operation.

I. CONTENT

II. GENERAL INFORMATION **3**

1. Description..... 3
2. Design..... 4
3. Communication and control devices..... 9
4. Dimensions, weights..... 10
5. Placement and Assembly..... 23
6. Damper suspension and connection to the duct..... 41

III. ACCESSORIES **43**

7. Cover grille..... 43

IV. TECHNICAL DATA **44**

8. Pressure loss..... 44
9. Coefficient of local pressure loss..... 45
10. Noise data..... 46

V. MATERIAL, FINISHING **52**

11. Material..... 52

VI. INSPECTION, TESTING **52**

12. Inspection, testing..... 52

VII. TRANSPORTATION AND STORAGE **53**

13. Logistic terms..... 53

VIII. ASSEMBLY, ATTENDANCE, MAINTENANCE AND REVISIONS **53**

14. Assembly..... 53
15. Entry into service and revisions..... 54
16. Spare parts..... 54

IX. PRODUCT DATA **54**

17. Nameplate..... 54
18. Quick review..... 55

X. ORDERING INFORMATION **56**

19. Ordering key..... 56

II. GENERAL INFORMATION

1. Description

Fig. 1 Damper SEDM

1.1. Smoke extraction dampers - multi are shutters in the smoke exhaust piping systems. The dampers are designed to remove heat and combustible products (e.g. smoke) from effected fire compartments. In the event of fire the Smoke and Fire ventilation system opens the damper in the affected section and removes combustion products and heat from this section.
The damper blade is controlled by electrical actuating mechanism.
Dampers are fire resistant and are intended for systems with manual or automatic activation.
Dampers are designed for using in fire compartments that can be connected to the smoke exhaust ducts (tested according to EN 1366-8) or they can be installed in or on the construction of the fire compartment.
Dampers can be delivered with or without flanges.

1.2. Damper characteristics

- CE certified acc. to EN 12101-8
- Tested in accordance with EN 1366-10
- Classified acc. to EN 13501-4+A1
- Fire resistance according Tab. 1.2.1
- External Casing leakage class C, Internal leakage min. class 2 acc. to EN 1751
- Cycling test in class C_{mod} acc. to EN 12101-8
- Certificate of constancy of performance No. 1391-CPR-2020/0066/O1
- Declaration of Perfomance No. PM/SEDM/02/20/1
- Hygienic assessment of fire dampers - Report No. 1.6/pos/19/19c

Tab. 1.2.1. Classification of Dampers

Supporting Construction	Classification
Horizontal duct system	**EI 120 (v_{ed} - i↔o) S1000C_{mod} AAmulti** **EI 120 (v_{ed} - i↔o) S1000C_{mod} MAmulti**
Vertical duct system	**EI 120 (h_{od} - i↔o) S1000C_{mod} AAmulti** **EI 120 (h_{od} - i↔o) S1000C_{mod} MAmulti**
Wall construction	**EI 120 (v_{ew} - i↔o) S1000C_{mod} AAmulti** **EI 90 (v_{ew} - i↔o) S1500C_{mod} AAmulti** **EI 90 (v_{ew} - i↔o) S1500C_{mod} MAmulti***
Ceiling construction	**EI 120 (h_{ow} - i↔o) S1000C_{mod} AAmulti** **EI 90 (h_{ow} - i↔o) S1500C_{mod} AAmulti** **EI 90 (h_{ow} - i↔o) S1500C_{mod} MAmulti***

*** In practice dampers are not in the open position at the beginning of smoke threat.**

1.3. Working conditions

Exact damper function is provided under the following conditions:
a) maximum air velocity 15 $m.s^{-1}$
b) underpressure max. -1500 Pa or overpressure max. 500 Pa.

Dampers can be installed in arbitrary position (horizontal or vertical blade axis).

Dampers are designed for macroclimatic areas with mild climate according to EN 60 721-3-3. Temperature in the place of installation is permitted to range from - 30°C to + 50°C.

1.4. The duck can be ended by KMM (TPM 002/96) grilles. During grilles installation blade overlaps has to be respected see chapter 4.3.

2. Design

2.1. Design with actuating mechanism

Design .44 and .54

SEDM is equipped by actuating mechanism Belimo BLE24(BE24-12) for 24V supply or BLE230(BE230-12) for 230V supply. SEDM with big dimensions is equipped by actuating mechanism Schischek InMax 50.75-S (dual supply 24V or 230V).
After being connected to power supply the actuating mechanism displaces the damper blade into operation position "OPEN" or „CLOSED“ (according to method of connection, see connection diagram). Running time is max. 60s. If is power supply cut off, actuating mechanism is stopped in actual position. The crank handle supplied with the actuator allows it to be operated manually. Signaling of the damper blade positions "OPEN" and "CLOSED" is provided by means of two integrated, invariably set terminal switches.

Actuating mechanism is placed (actuating mechanism with BKNE 230-24) in insulated box. Actuating mechanism (actuating mechanism with BKNE 230-24) is accessible after cover door removing. Power supply connection is ensured by incombustible cable. This cable is leaded through insulated box. This cable gland has to have minimum fire resistance 30 minutes.

Fig. 2 Damper with actuating machanism

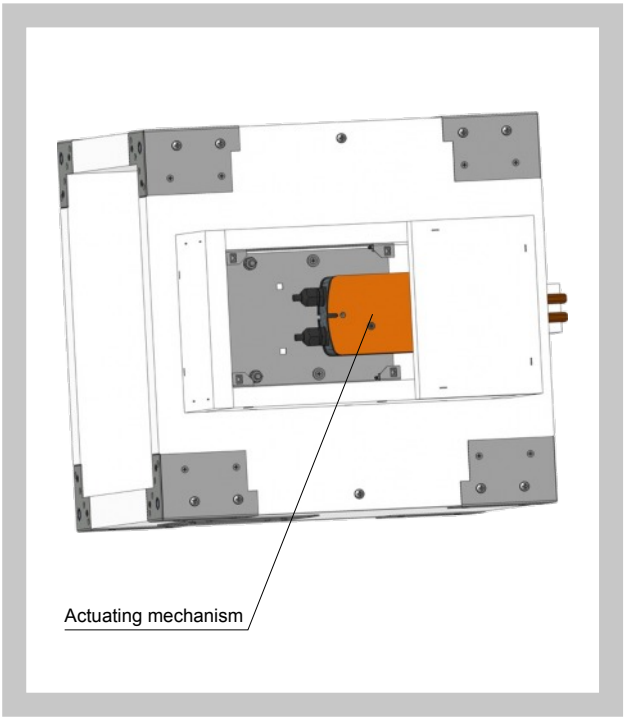

Tab. 2.1.1. Actuating mechanism BELIMO BLE 24(-ST), BLE 230

Actuating mechanism BELIMO	**BLE 24(-ST)**	**BLE230**
Nominal voltage	AC 24V 50/60Hz DC 24 V	AC 230 V 50/60Hz
Power consumption - motoring - holding	7,5 W < 0,5 W	5W < 1 W
Dimensioning	9 VA (Imax 2,7 A @ 5 ms)	12 VA (Imax 6 A @ 5 ms)
Protection class	III	II
Degree of protection	IP 54	
Running time for 95°	< 30 s	
Ambient temperature range Non-operating temperature	- 30 °C … + 50 °C - 40 °C … + 80 °C	
Connecting - motor - auxiliary switch	cable 1 m, 3 x 0,75 mm² cable 1 m, 6 x 0,75 mm² (BLE 24-ST) with plug-in connectors	

Fig. 3 Actuating mechanism BELIMO BLE 24(-ST)

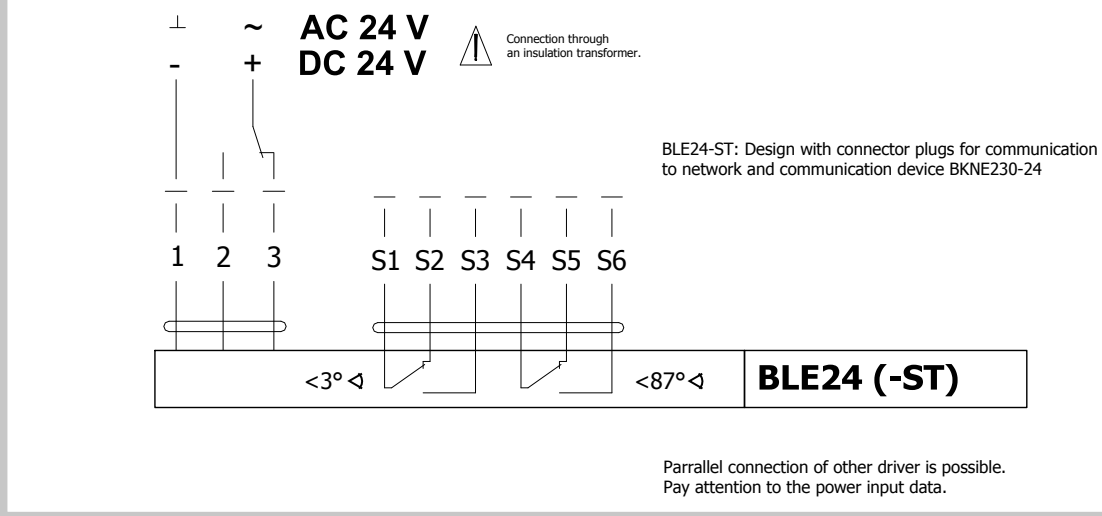

Fig. 4 Actuating mechanism BELIMO BLE 230

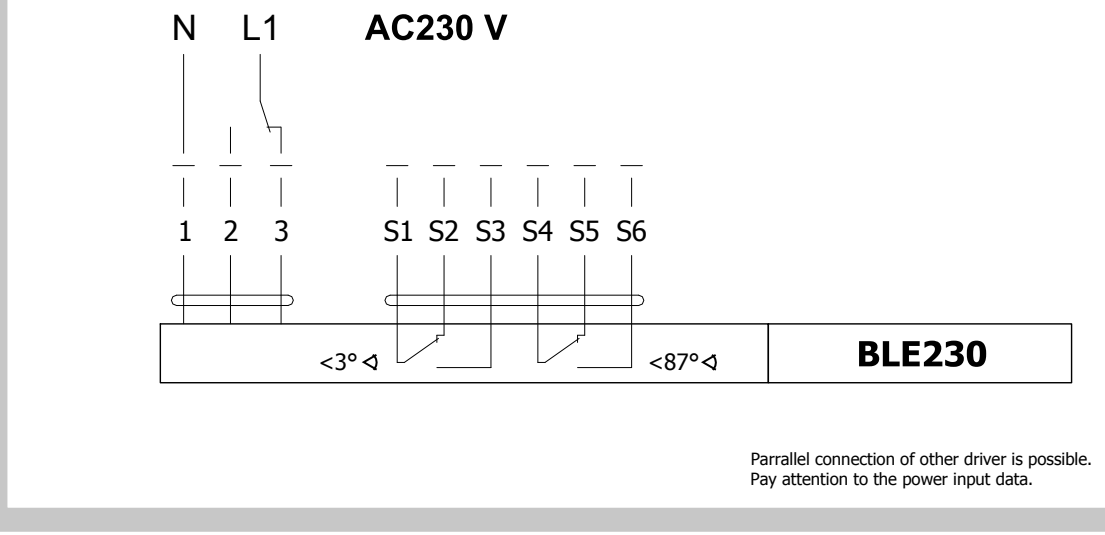

Tab. 2.1.2. Actuating mechanism BELIMO BE 24-12(-ST), BE 230-12

Actuating mechanism BELIMO	**BE 24-12 (-ST)**	**BE230-12**
Nominal voltage	AC 24V 50/60Hz DC 24 V	AC 230 V 50/60Hz
Power consumption - motoring - holding	12 W 0,5 W	8W 0,5 W
Dimensioning	18 VA (Imax 8.2 A @ 5 ms)	15 VA (Imax 7.9 A @ 5 ms)
Protection class	III	II
Degree of protection	IP 54	
Running time for 95°	< 60 s	
Ambient temperature range Non-operating temperature	- 30 °C … + 50 °C - 40 °C … + 80 °C	
Connecting - motor - auxiliary switch	cable 1 m, 3 x 0,75 mm² cable 1 m, 6 x 0,75 mm² (BE 24-ST) with plug-in connectors	

Fig. 5 Actuating mechanism BELIMO BE 24-12(-ST)

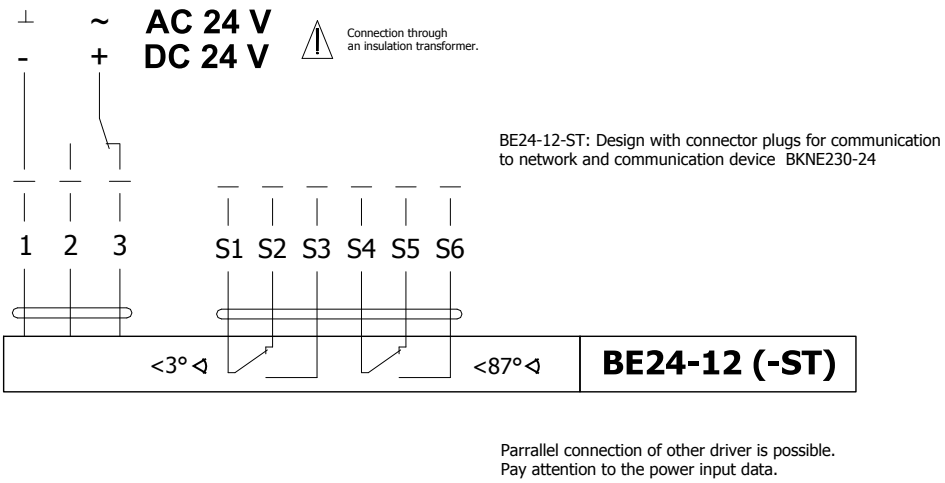

Fig. 6 Actuating mechanism BELIMO BE 230-12

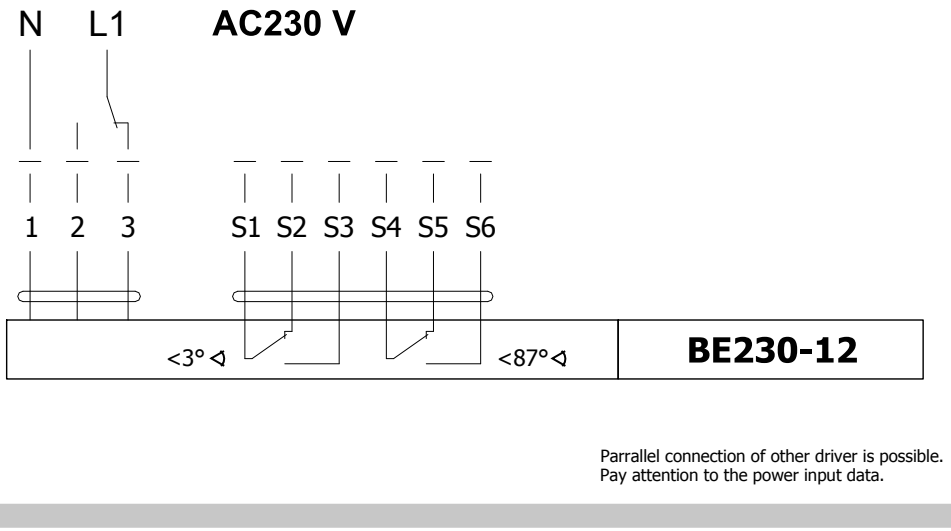

Tab. 2.1.3. Actuating mechanism SCHISCHEK InMax 50.75-S

Actuating mechanism SCHISCHEK	InMax 50.75-S
Nominal voltage	24-240 VAC/DC 50/60Hz
Power consumption - motoring - heating	10 W 16 W (start at -20°C)
Protection class	I
Degree of protection	IP 66
Running time for 95°	< 60 s
Ambient temperature range Non-operating temperature	- 40 °C … + 50 °C - 40 °C … + 70 °C
Connecting	cable 1 m, 0,5 mm²

Fig. 7 Actuating mechanism SCHISCHEK InMax 50.75-S

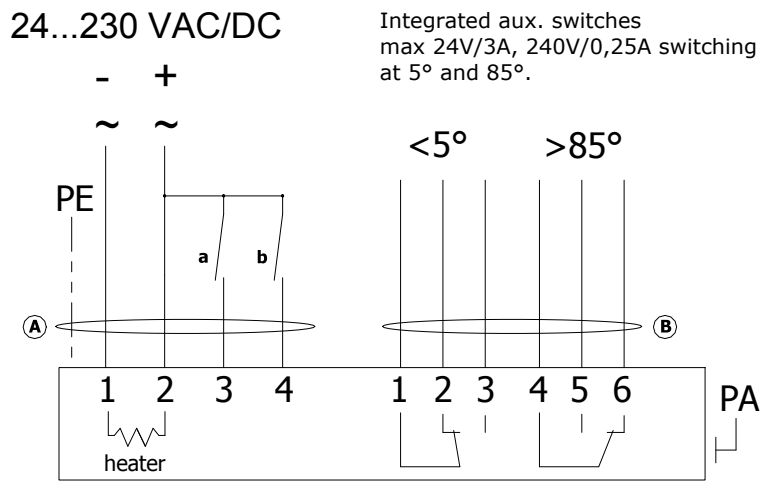

2.2. Design with the communication and supply device

Design .66

Design with the communication and supply device BKNE230-24 and the actuating mechanism BLE24(BE24-12)-ST.

BKNE230-24 functions as a decentralized network device for supplying the actuating mechanism BLE24(BE24-12)-ST on one hand and on the other hand it transmits signals from communication and control device BKSE24-6.

It simplifies electrical wiring and interconnection of dampers. It facilitates on site check and enables central control and checks of fire damper by means of a simple 2-conductor wiring. BKNE230-24 signals the damper position „OPEN"/„CLOSED" (from switches on the actuator) and any fault alarms to the BKSE24-6 unit. It also receives positioning commands from the control unit and triggers the actuator to the required position. The last control command is retained troughout temporary power failures.

The BKNE230-24 unit monitors the positions of the switches on the actuator, its running time and the exchange of data with the control and monitoring unit BKSE24-6. It also monitors the actuator current and the power supply. In order to make installation as simple as possible the smoke extraction damper actuators ...-ST are fitted with plug connectors that can be inserted directly into the BKNE230-24 unit.

The 2-wire conductor must be connected to screw terminals 6 and 7. It is recommended that a fire alarm signal cable suitable for the application be used for the 2-wire conductor. It is essential to ensure the correct polarity.

More information in catalogue Belimo.

Design .66 is not available by using actuating mechanism InMax 50.75-S

Fig. 8 Damper with actuating mechanism and BKNE230-24

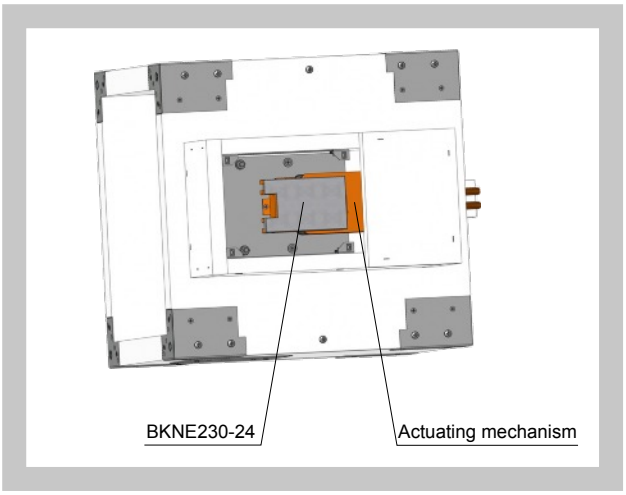

Tab. 2.2.1. Communication and supply device BKNE 230-24

Communication and supply device	BKNE 230-24
Nominal voltage	AC 230V 50/60Hz
Power consumption	10 W (including actuating mechanism)
Dimensioning	19 VA (including actuating mechanism)
Degree of protection	II
Ambient temperature range Non-operating temperature	- 30 °C … + 50 °C - 40 °C … + 80 °C
Connecting - net - actuator - terminal board	cable 1 m without plug 6-pole connector, 3-pole connector screw terminals for cable 2x1,5 mm²

Fig. 9 Communication and supply device BKNE 230-24

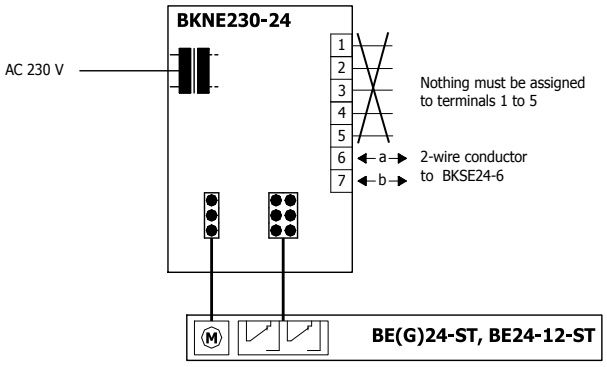

Displays

LED	Stav	Funkce
yellow	flashing light	damper moving to OPEN
yellow	steady light	damper open
green	flashing light	damper moving to CLOSED
green	steady light	damper closed
yellow or green	flashing at double frequency	fault
yellow+green	dark	power failure

3. Communication and control devices

3.1. BKSE24-6 indicates operating status and fault signals for the smoke extraction dampers. The auxiliary contacts that are incorporated also allow functions to be signaled or passed on to higherlevel control systems. The signals from the BKNE230-24 unit are received by the BKSE24-6 unit and evaluated individually. All BKNE230-24 units are triggered simultaneously. To BKSE24-6 can be connected max. 6 BKNE230-24.

Communication is via the 2-wire conductor. Correct operation of the dampers is indicated by means of two LEDs. The operating status of the SBSE-Control system and any faults are also indicated by this LED and the corresponding fault LED.
The BKSE24-6 unit can be clipped directly to a 35 mm DIN mounting rail and connected by means of two 9-pole plug-in terminals.

Tab. 3.1.1. Communication and control devices BKSE 24-6

Communication and control devices	BKSE 24-6
Nominal voltage	AC 24 V 50/60Hz
Power consumption	3,5 W (operating position)
Dimensioning	5,5 VA 18 VA (Imax 6.4 A @ 2.5 ms)
Protection class	III
Degree of protection	IP 20
Ambient temperature range	0 … + 50 °C
Connecting	screw terminals for cable 2x1,5 mm²

Fig. 10 Communication and control devices BKSE 24-6

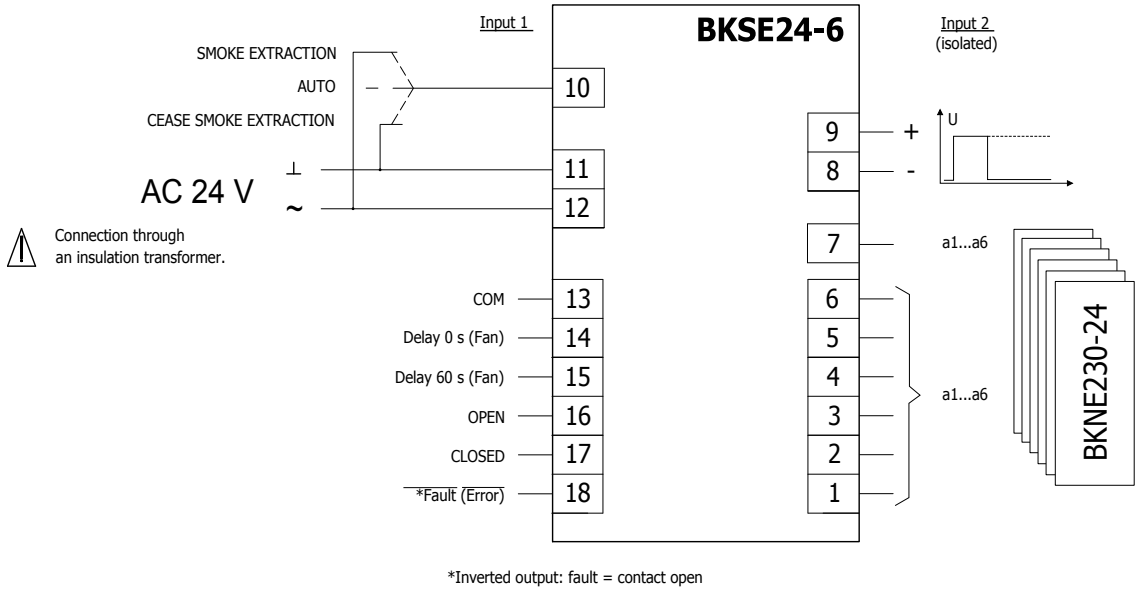

4. Dimestions, weights

4.1. Dimensions

Fig. 11 Smoke extraction dampers - multi without flanges

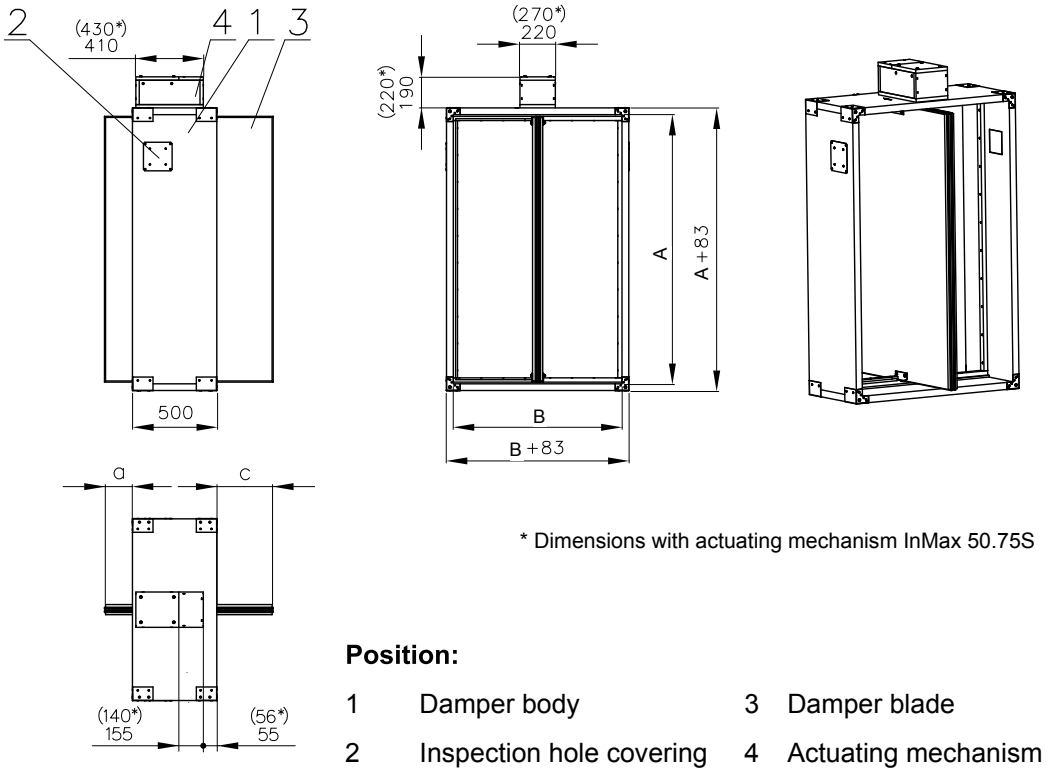

* Dimensions with actuating mechanism InMax 50.75S

Position:

1	Damper body	3	Damper blade
2	Inspection hole covering	4	Actuating mechanism

Fig. 12 Smoke extraction dampers - multi with flanges

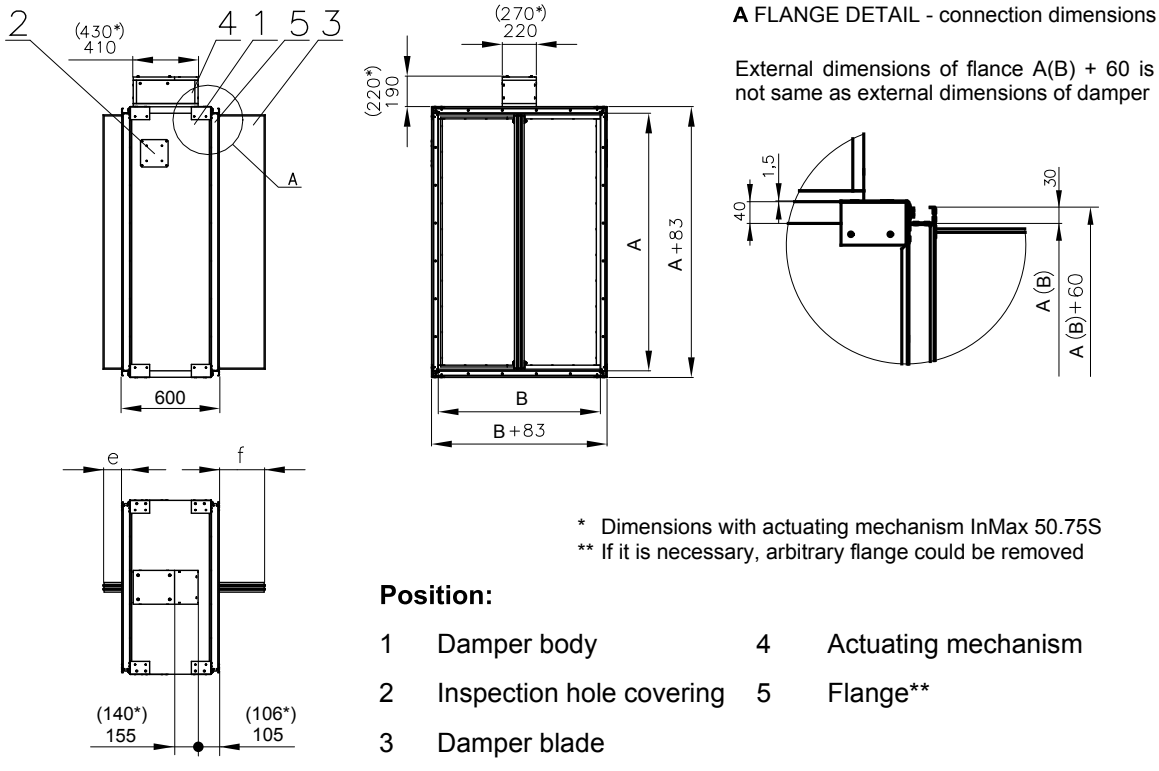

* Dimensions with actuating mechanism InMax 50.75S
** If it is necessary, arbitrary flange could be removed

Position:

1	Damper body	4	Actuating mechanism
2	Inspection hole covering	5	Flange**
3	Damper blade		

4.2. Weights and effective area

Tab. 4.2.1. Weights and effective area

Size AxB	Without flanges		With flanges		Weight [kg]		Effective area S_{ef} [m²]	Actuating mechanism type
	a	c	e	f	Without flanges	With flanges		
180 x 180	-	-	-	-	38,3	41,4	0,0077	BELIMO BLE (15 N.m)
180 x 200	-	-	-	-	39,6	42,8	0,0099	BELIMO BLE (15 N.m)
180 x 225	-	-	-	-	41,2	44,4	0,0127	BELIMO BLE (15 N.m)
180 x 250	-	-	-	-	42,8	46,2	0,0154	BELIMO BLE (15 N.m)
180 x 280	-	-	-	-	44,6	48,2	0,0187	BELIMO BLE (15 N.m)
180 x 300	-	-	-	-	45,9	49,5	0,0209	BELIMO BLE (15 N.m)
180 x 315	-	-	-	-	46,8	50,6	0,0226	BELIMO BLE (15 N.m)
180 x 355	-	6,5	-	-	49,3	53,3	0,0270	BELIMO BLE (15 N.m)
180 x 400	-	29	-	-	52,1	56,4	0,0319	BELIMO BLE (15 N.m)
180 x 450	-	54	-	4	55,2	59,8	0,0374	BELIMO BLE (15 N.m)
180 x 500	-	79	-	29	58,3	63,2	0,0429	BELIMO BLE (15 N.m)
180 x 550	-	104	-	54	61,4	66,6	0,0484	BELIMO BLE (15 N.m)
180 x 560	-	109	-	59	62,1	67,2	0,0495	BELIMO BLE (15 N.m)
180 x 600	-	129	-	79	64,7	69,9	0,0539	BELIMO BLE (15 N.m)
180 x 630	-	144	-	94	66,6	72,1	0,0572	BELIMO BLE (15 N.m)
180 x 650	-	154	-	104	67,8	73,4	0,0594	BELIMO BLE (15 N.m)
180 x 700	11	179	-	129	70,9	76,8	0,0649	BELIMO BLE (15 N.m)
180 x 710	16	184	-	134	71,6	77,5	0,0660	BELIMO BLE (15 N.m)
180 x 750	36	204	-	154	74,0	80,2	0,0704	BELIMO BLE (15 N.m)
180 x 800	61	229	11	179	77,1	83,6	0,0759	BELIMO BE (40 N.m)
180 x 900	111	279	61	229	83,4	90,5	0,0869	BELIMO BE (40 N.m)
180 x 1000	161	329	111	279	89,6	97,2	0,0979	BELIMO BE (40 N.m)
200 x 180	-	-	-	-	39,6	42,7	0,0091	BELIMO BLE (15 N.m)
200 x 200	-	-	-	-	40,9	44,1	0,0117	BELIMO BLE (15 N.m)
200 x 225	-	-	-	-	42,4	45,8	0,0150	BELIMO BLE (15 N.m)
200 x 250	-	-	-	-	44,0	47,5	0,0182	BELIMO BLE (15 N.m)
200 x 280	-	-	-	-	45,9	49,7	0,0221	BELIMO BLE (15 N.m)
200 x 300	-	-	-	-	47,3	51,0	0,0247	BELIMO BLE (15 N.m)
200 x 315	-	-	-	-	48,2	52,1	0,0267	BELIMO BLE (15 N.m)
200 x 355	-	6,5	-	-	50,8	54,8	0,0319	BELIMO BLE (15 N.m)
200 x 400	-	29	-	-	53,6	58,1	0,0377	BELIMO BLE (15 N.m)
200 x 450	-	54	-	4	56,8	61,4	0,0442	BELIMO BLE (15 N.m)
200 x 500	-	79	-	29	60,1	64,9	0,0507	BELIMO BLE (15 N.m)
200 x 550	-	104	-	54	63,2	68,4	0,0572	BELIMO BLE (15 N.m)
200 x 560	-	109	-	59	63,9	69,1	0,0585	BELIMO BLE (15 N.m)
200 x 600	-	129	-	79	66,4	72,0	0,0637	BELIMO BLE (15 N.m)
200 x 630	-	144	-	94	68,3	74,0	0,0676	BELIMO BLE (15 N.m)
200 x 650	-	154	-	104	69,7	75,3	0,0702	BELIMO BLE (15 N.m)
200 x 700	11	179	-	129	72,8	78,8	0,0767	BELIMO BLE (15 N.m)
200 x 710	16	184	-	134	73,4	79,5	0,0780	BELIMO BLE (15 N.m)
200 x 750	36	204	-	154	76,0	82,4	0,0832	BELIMO BLE (15 N.m)
200 x 800	61	229	11	179	79,2	85,9	0,0897	BELIMO BE (40 N.m)
200 x 900	111	279	61	229	85,6	92,7	0,1027	BELIMO BE (40 N.m)
200 x 1000	161	329	111	279	91,9	99,8	0,1157	BELIMO BE (40 N.m)
225 x 180	-	-	-	-	41,0	44,4	0,0109	BELIMO BLE (15 N.m)
225 x 200	-	-	-	-	42,4	45,8	0,0140	BELIMO BLE (15 N.m)
225 x 225	-	-	-	-	44,0	47,5	0,0178	BELIMO BLE (15 N.m)
225 x 250	-	-	-	-	45,6	49,3	0,0217	BELIMO BLE (15 N.m)
225 x 280	-	-	-	-	47,7	51,4	0,0264	BELIMO BLE (15 N.m)
225 x 300	-	-	-	-	49,0	52,9	0,0295	BELIMO BLE (15 N.m)
225 x 315	-	-	-	-	50,0	54,0	0,0318	BELIMO BLE (15 N.m)
225 x 355	-	6,5	-	-	52,5	56,8	0,0380	BELIMO BLE (15 N.m)

Size AxB	Without flanges		With flanges		Weight [kg]		Effective area S_{ef} [m²]	Actuating mechanism type
	a	c	e	f	Without flanges	With flanges		
225 x 400	-	29	-	-	55,5	60,1	0,0450	BELIMO BLE (15 N.m)
225 x 450	-	54	-	4	58,9	63,6	0,0527	BELIMO BLE (15 N.m)
225 x 500	-	79	-	29	62,1	67,2	0,0605	BELIMO BLE (15 N.m)
225 x 550	-	104	-	54	65,3	70,7	0,0682	BELIMO BLE (15 N.m)
225 x 560	-	109	-	59	66,0	71,4	0,0698	BELIMO BLE (15 N.m)
225 x 600	-	129	-	79	68,7	74,3	0,0760	BELIMO BLE (15 N.m)
225 x 630	-	144	-	94	70,6	76,4	0,0806	BELIMO BLE (15 N.m)
225 x 650	-	154	-	104	72,0	77,9	0,0837	BELIMO BLE (15 N.m)
225 x 700	11	179	-	129	75,2	81,4	0,0915	BELIMO BLE (15 N.m)
225 x 710	16	184	-	134	75,9	82,1	0,0930	BELIMO BLE (15 N.m)
225 x 750	36	204	-	154	78,6	85,1	0,0992	BELIMO BLE (15 N.m)
225 x 800	61	229	11	179	81,8	88,6	0,1070	BELIMO BE (40 N.m)
225 x 900	111	279	61	229	88,4	95,7	0,1225	BELIMO BE (40 N.m)
225 x 1000	161	329	111	279	94,9	102,9	0,1380	BELIMO BE (40 N.m)
250 x 180	-	-	-	-	42,5	46,0	0,0126	BELIMO BLE (15 N.m)
250 x 200	-	-	-	-	43,9	47,5	0,0162	BELIMO BLE (15 N.m)
250 x 225	-	-	-	-	45,6	49,3	0,0207	BELIMO BLE (15 N.m)
250 x 250	-	-	-	-	47,3	51,2	0,0252	BELIMO BLE (15 N.m)
250 x 280	-	-	-	-	49,3	53,3	0,0306	BELIMO BLE (15 N.m)
250 x 300	-	-	-	-	50,6	54,8	0,0342	BELIMO BLE (15 N.m)
250 x 315	-	-	-	-	51,7	55,9	0,0369	BELIMO BLE (15 N.m)
250 x 355	-	6,5	-	-	54,4	58,7	0,0441	BELIMO BLE (15 N.m)
250 x 400	-	29	-	-	57,4	62,1	0,0522	BELIMO BLE (15 N.m)
250 x 450	-	54	-	4	60,8	65,7	0,0612	BELIMO BLE (15 N.m)
250 x 500	-	79	-	29	64,1	69,4	0,0702	BELIMO BLE (15 N.m)
250 x 550	-	104	-	54	67,5	73,0	0,0792	BELIMO BLE (15 N.m)
250 x 560	-	109	-	59	68,2	73,7	0,0810	BELIMO BLE (15 N.m)
250 x 600	-	129	-	79	70,9	76,7	0,0882	BELIMO BLE (15 N.m)
250 x 630	-	144	-	94	72,9	78,8	0,0936	BELIMO BLE (15 N.m)
250 x 650	-	154	-	104	74,3	80,3	0,0972	BELIMO BLE (15 N.m)
250 x 700	11	179	-	129	77,6	84,0	0,1062	BELIMO BLE (15 N.m)
250 x 710	16	184	-	134	78,3	84,8	0,1080	BELIMO BLE (15 N.m)
250 x 750	36	204	-	154	81,0	87,6	0,1152	BELIMO BLE (15 N.m)
250 x 800	61	229	11	179	84,4	91,3	0,1242	BELIMO BE (40 N.m)
250 x 900	111	279	61	229	91,1	98,6	0,1422	BELIMO BE (40 N.m)
250 x 1000	161	329	111	279	97,9	105,8	0,1602	BELIMO BE (40 N.m)
280 x 180	-	-	-	-	42,8	46,2	0,0147	BELIMO BLE (15 N.m)
280 x 200	-	-	-	-	44,1	47,7	0,0189	BELIMO BLE (15 N.m)
280 x 225	-	-	-	-	45,8	49,4	0,0242	BELIMO BLE (15 N.m)
280 x 250	-	-	-	-	47,5	51,2	0,0294	BELIMO BLE (15 N.m)
280 x 280	-	-	-	-	49,4	53,4	0,0357	BELIMO BLE (15 N.m)
280 x 300	-	-	-	-	50,8	54,9	0,0399	BELIMO BLE (15 N.m)
280 x 315	-	-	-	-	51,7	56,0	0,0431	BELIMO BLE (15 N.m)
280 x 355	-	6,5	-	-	54,5	58,9	0,0515	BELIMO BLE (15 N.m)
280 x 400	-	29	-	-	57,5	62,1	0,0609	BELIMO BLE (15 N.m)
280 x 450	-	54	-	4	60,8	65,8	0,0714	BELIMO BLE (15 N.m)
280 x 500	-	79	-	29	64,2	69,4	0,0819	BELIMO BLE (15 N.m)
280 x 550	-	104	-	54	67,5	72,9	0,0924	BELIMO BLE (15 N.m)
280 x 560	-	109	-	59	68,3	73,7	0,0945	BELIMO BLE (15 N.m)
280 x 600	-	129	-	79	70,9	76,6	0,1029	BELIMO BLE (15 N.m)
280 x 630	-	144	-	94	72,9	78,8	0,1092	BELIMO BLE (15 N.m)

Size AxB	Without flanges		With flanges		Weight [kg]		Effective area Sef [m²]	Actuating mechanism type
	a	c	e	f	Without flanges	With flanges		
280 x 650	-	154	-	104	74,2	80,2	0,1134	BELIMO BLE (15 N.m)
280 x 700	11	179	-	129	77,6	83,9	0,1239	BELIMO BLE (15 N.m)
280 x 710	16	184	-	134	78,3	84,6	0,1260	BELIMO BLE (15 N.m)
280 x 750	36	204	-	154	80,9	87,5	0,1344	BELIMO BLE (15 N.m)
280 x 800	61	229	11	179	84,2	91,1	0,1449	BELIMO BE (40 N.m)
280 x 900	111	279	61	229	91,0	98,3	0,1659	BELIMO BE (40 N.m)
280 x 1000	161	329	111	279	97,6	105,6	0,1869	BELIMO BE (40 N.m)
300 x 180	-	-	-	-	43,9	47,5	0,0161	BELIMO BLE (15 N.m)
300 x 200	-	-	-	-	45,2	49,0	0,0207	BELIMO BLE (15 N.m)
300 x 225	-	-	-	-	46,9	50,8	0,0265	BELIMO BLE (15 N.m)
300 x 250	-	-	-	-	48,8	52,7	0,0322	BELIMO BLE (15 N.m)
300 x 280	-	-	-	-	50,7	54,9	0,0391	BELIMO BLE (15 N.m)
300 x 300	-	-	-	-	52,1	56,3	0,0437	BELIMO BLE (15 N.m)
300 x 315	-	-	-	-	53,2	57,5	0,0472	BELIMO BLE (15 N.m)
300 x 355	-	6,5	-	-	55,9	60,3	0,0564	BELIMO BLE (15 N.m)
300 x 400	-	29	-	-	58,9	63,7	0,0667	BELIMO BLE (15 N.m)
300 x 450	-	54	-	4	62,4	67,3	0,0782	BELIMO BLE (15 N.m)
300 x 500	-	79	-	29	65,8	71,1	0,0897	BELIMO BLE (15 N.m)
300 x 550	-	104	-	54	69,2	74,8	0,1012	BELIMO BLE (15 N.m)
300 x 560	-	109	-	59	69,8	75,5	0,1035	BELIMO BLE (15 N.m)
300 x 600	-	129	-	79	72,5	78,4	0,1127	BELIMO BLE (15 N.m)
300 x 630	-	144	-	94	74,6	80,6	0,1196	BELIMO BLE (15 N.m)
300 x 650	-	154	-	104	76,1	82,2	0,1242	BELIMO BLE (15 N.m)
300 x 700	11	179	-	129	79,4	85,8	0,1357	BELIMO BLE (15 N.m)
300 x 710	16	184	-	134	80,1	86,6	0,1380	BELIMO BLE (15 N.m)
300 x 750	36	204	-	154	82,8	89,4	0,1472	BELIMO BLE (15 N.m)
300 x 800	61	229	11	179	86,3	93,2	0,1587	BELIMO BE (40 N.m)
300 x 900	111	279	61	229	93,1	100,6	0,1817	BELIMO BE (40 N.m)
300 x 1000	161	329	111	279	100,0	107,9	0,2047	BELIMO BE (40 N.m)
315 x 180	-	-	-	-	44,7	48,5	0,0172	BELIMO BLE (15 N.m)
315 x 200	-	-	-	-	46,2	49,9	0,0221	BELIMO BLE (15 N.m)
315 x 225	-	-	-	-	47,8	51,7	0,0282	BELIMO BLE (15 N.m)
315 x 250	-	-	-	-	49,7	53,7	0,0343	BELIMO BLE (15 N.m)
315 x 280	-	-	-	-	51,7	55,9	0,0417	BELIMO BLE (15 N.m)
315 x 300	-	-	-	-	53,0	57,5	0,0466	BELIMO BLE (15 N.m)
315 x 315	-	-	-	-	54,1	58,5	0,0502	BELIMO BLE (15 N.m)
315 x 355	-	6,5	-	-	56,9	61,5	0,0600	BELIMO BLE (15 N.m)
315 x 400	-	29	-	-	60,1	64,9	0,0711	BELIMO BLE (15 N.m)
315 x 450	-	54	-	4	63,4	68,6	0,0833	BELIMO BLE (15 N.m)
315 x 500	-	79	-	29	67,0	72,4	0,0956	BELIMO BLE (15 N.m)
315 x 550	-	104	-	54	70,5	76,1	0,1078	BELIMO BLE (15 N.m)
315 x 560	-	109	-	59	71,1	76,8	0,1103	BELIMO BLE (15 N.m)
315 x 600	-	129	-	79	73,8	79,8	0,1201	BELIMO BLE (15 N.m)
315 x 630	-	144	-	94	75,9	82,0	0,1274	BELIMO BLE (15 N.m)
315 x 650	-	154	-	104	77,4	83,6	0,1323	BELIMO BLE (15 N.m)
315 x 700	11	179	-	129	80,9	87,4	0,1446	BELIMO BLE (15 N.m)
315 x 710	16	184	-	134	81,5	88,0	0,1470	BELIMO BLE (15 N.m)
315 x 750	36	204	-	154	84,2	91,0	0,1568	BELIMO BLE (15 N.m)
315 x 800	61	229	11	179	87,8	94,8	0,1691	BELIMO BE (40 N.m)
315 x 900	111	279	61	229	94,6	102,3	0,1936	BELIMO BE (40 N.m)
315 x 1000	161	329	111	279	101,7	109,7	0,2181	BELIMO BE (40 N.m)

Size AxB	Without flanges		With flanges		Weight [kg]		Effective area S_{ef} [m²]	Actuating mechanism type
	a	c	e	f	Without flanges	With flanges		
355 x 180	-	-	-	-	46,3	50,2	0,0200	BELIMO BLE (15 N.m)
355 x 200	-	-	-	-	47,7	51,7	0,0257	BELIMO BLE (15 N.m)
355 x 225	-	-	-	-	49,5	53,6	0,0328	BELIMO BLE (15 N.m)
355 x 250	-	-	-	-	51,3	55,6	0,0399	BELIMO BLE (15 N.m)
355 x 280	-	-	-	-	53,5	57,9	0,0485	BELIMO BLE (15 N.m)
355 x 300	-	-	-	-	54,9	59,4	0,0542	BELIMO BLE (15 N.m)
355 x 315	-	-	-	-	55,9	60,5	0,0584	BELIMO BLE (15 N.m)
355 x 355	-	6,5	-	-	58,8	63,5	0,0698	BELIMO BLE (15 N.m)
355 x 400	-	29	-	-	62,0	66,9	0,0827	BELIMO BLE (15 N.m)
355 x 450	-	54	-	4	65,5	70,8	0,0969	BELIMO BLE (15 N.m)
355 x 500	-	79	-	29	69,1	74,6	0,1112	BELIMO BLE (15 N.m)
355 x 550	-	104	-	54	72,6	78,5	0,1254	BELIMO BLE (15 N.m)
355 x 560	-	109	-	59	73,3	79,2	0,1283	BELIMO BLE (15 N.m)
355 x 600	-	129	-	79	76,2	82,2	0,1397	BELIMO BLE (15 N.m)
355 x 630	-	144	-	94	78,3	84,5	0,1482	BELIMO BLE (15 N.m)
355 x 650	-	154	-	104	79,7	86,0	0,1539	BELIMO BLE (15 N.m)
355 x 700	11	179	-	129	83,3	89,9	0,1682	BELIMO BLE (15 N.m)
355 x 710	16	184	-	134	84,0	90,6	0,1710	BELIMO BLE (15 N.m)
355 x 750	36	204	-	154	86,8	93,7	0,1824	BELIMO BLE (15 N.m)
355 x 800	61	229	11	179	90,4	97,5	0,1967	BELIMO BE (40 N.m)
355 x 900	111	279	61	229	97,4	105,1	0,2252	BELIMO BE (40 N.m)
355 x 1000	161	329	111	279	104,6	112,8	0,2537	BELIMO BE (40 N.m)
400 x 180	-	-	-	-	49,7	53,8	0,0231	BELIMO BLE (15 N.m)
400 x 200	-	-	-	-	51,2	55,5	0,0297	BELIMO BLE (15 N.m)
400 x 225	-	-	-	-	53,0	57,5	0,0380	BELIMO BLE (15 N.m)
400 x 250	-	-	-	-	55,0	59,5	0,0462	BELIMO BLE (15 N.m)
400 x 280	-	-	-	-	57,2	61,9	0,0561	BELIMO BLE (15 N.m)
400 x 300	-	-	-	-	58,8	63,4	0,0627	BELIMO BLE (15 N.m)
400 x 315	-	-	-	-	59,8	64,7	0,0677	BELIMO BLE (15 N.m)
400 x 355	-	6,5	-	-	62,9	68,0	0,0809	BELIMO BLE (15 N.m)
400 x 400	-	29	-	-	66,2	71,5	0,0957	BELIMO BLE (15 N.m)
400 x 450	-	54	-	4	69,9	75,5	0,1122	BELIMO BLE (15 N.m)
400 x 500	-	79	-	29	73,7	79,6	0,1287	BELIMO BLE (15 N.m)
400 x 550	-	104	-	54	77,5	83,6	0,1452	BELIMO BLE (15 N.m)
400 x 560	-	109	-	59	78,3	84,4	0,1485	BELIMO BLE (15 N.m)
400 x 600	-	129	-	79	81,3	87,6	0,1617	BELIMO BLE (15 N.m)
400 x 630	-	144	-	94	83,5	90,1	0,1716	BELIMO BLE (15 N.m)
400 x 650	-	154	-	104	85,0	91,7	0,1782	BELIMO BLE (15 N.m)
400 x 700	11	179	-	129	88,8	95,7	0,1947	BELIMO BLE (15 N.m)
400 x 710	16	184	-	134	89,6	96,5	0,1980	BELIMO BLE (15 N.m)
400 x 750	36	204	-	154	92,6	99,7	0,2112	BELIMO BLE (15 N.m)
400 x 800	61	229	11	179	96,3	103,7	0,2277	BELIMO BE (40 N.m)
400 x 900	111	279	61	229	103,7	111,8	0,2607	BELIMO BE (40 N.m)
400 x 1000	161	329	111	279	111,3	119,9	0,2937	BELIMO BE (40 N.m)
450 x 180	-	-	-	-	52,7	57,1	0,0266	BELIMO BLE (15 N.m)
450 x 200	-	-	-	-	54,2	58,8	0,0342	BELIMO BLE (15 N.m)
450 x 225	-	-	-	-	56,2	60,8	0,0437	BELIMO BLE (15 N.m)
450 x 250	-	-	-	-	58,1	62,9	0,0532	BELIMO BLE (15 N.m)
450 x 280	-	-	-	-	60,5	65,4	0,0646	BELIMO BLE (15 N.m)
450 x 300	-	-	-	-	62,0	67,1	0,0722	BELIMO BLE (15 N.m)
450 x 315	-	-	-	-	63,2	68,4	0,0779	BELIMO BLE (15 N.m)

Size AxB	Without flanges		With flanges		Weight [kg]		Effective area S_{ef} [m^2]	Actuating mechanism type
	a	c	e	f	Without flanges	With flanges		
450 x 355	-	6,5	-	-	66,3	71,8	0,0931	BELIMO BLE (15 N.m)
450 x 400	-	29	-	-	69,9	75,5	0,1102	BELIMO BLE (15 N.m)
450 x 450	-	54	-	4	73,8	79,7	0,1292	BELIMO BLE (15 N.m)
450 x 500	-	79	-	29	77,7	83,9	0,1482	BELIMO BLE (15 N.m)
450 x 550	-	104	-	54	81,6	88,0	0,1672	BELIMO BLE (15 N.m)
450 x 560	-	109	-	59	82,4	88,9	0,1710	BELIMO BLE (15 N.m)
450 x 600	-	129	-	79	85,5	92,3	0,1862	BELIMO BLE (15 N.m)
450 x 630	-	144	-	94	87,9	94,8	0,1976	BELIMO BLE (15 N.m)
450 x 650	-	154	-	104	89,4	96,5	0,2052	BELIMO BLE (15 N.m)
450 x 700	11	179	-	129	93,5	100,6	0,2242	BELIMO BLE (15 N.m)
450 x 710	16	184	-	134	94,3	101,5	0,2280	BELIMO BLE (15 N.m)
450 x 750	36	204	-	154	97,4	104,8	0,2432	BELIMO BLE (15 N.m)
450 x 800	61	229	11	179	101,3	109,1	0,2622	BELIMO BE (40 N.m)
450 x 900	111	279	61	229	109,1	117,4	0,3002	BELIMO BE (40 N.m)
450 x 1000	161	329	111	279	118,3	127,1	0,3382	BELIMO BE (40 N.m)
500 x 180	-	-	-	-	53,4	56,9	0,0301	BELIMO BLE (15 N.m)
500 x 200	-	-	-	-	55,0	58,7	0,0387	BELIMO BLE (15 N.m)
500 x 225	-	-	-	-	56,9	60,6	0,0495	BELIMO BLE (15 N.m)
500 x 250	-	-	-	-	58,9	62,7	0,0602	BELIMO BLE (15 N.m)
500 x 280	-	-	-	-	61,3	65,2	0,0731	BELIMO BLE (15 N.m)
500 x 300	-	-	-	-	62,9	66,9	0,0817	BELIMO BLE (15 N.m)
500 x 315	-	-	-	-	64,0	68,1	0,0882	BELIMO BLE (15 N.m)
500 x 355	-	6,5	-	-	67,1	71,5	0,1054	BELIMO BLE (15 N.m)
500 x 400	-	29	-	-	70,8	75,2	0,1247	BELIMO BLE (15 N.m)
500 x 450	-	54	-	4	74,6	79,2	0,1462	BELIMO BLE (15 N.m)
500 x 500	-	79	-	29	78,6	83,4	0,1677	BELIMO BLE (15 N.m)
500 x 550	-	104	-	54	82,5	87,5	0,1892	BELIMO BLE (15 N.m)
500 x 560	-	109	-	59	83,3	88,3	0,1935	BELIMO BLE (15 N.m)
500 x 600	-	129	-	79	86,5	91,6	0,2107	BELIMO BLE (15 N.m)
500 x 630	-	144	-	94	88,8	94,1	0,2236	BELIMO BLE (15 N.m)
500 x 650	-	154	-	104	90,4	95,8	0,2322	BELIMO BLE (15 N.m)
500 x 700	11	179	-	129	94,4	99,9	0,2537	BELIMO BLE (15 N.m)
500 x 710	16	184	-	134	95,1	100,7	0,2580	BELIMO BLE (15 N.m)
500 x 750	36	204	-	154	98,3	104,1	0,2752	BELIMO BLE (15 N.m)
500 x 800	61	229	11	179	102,3	108,1	0,2967	BELIMO BE (40 N.m)
500 x 900	111	279	61	229	110,0	116,4	0,3397	BELIMO BE (40 N.m)
500 x 1000	161	329	111	279	119,3	126	0,3827	BELIMO BE (40 N.m)
550 x 180	-	-	-	-	56,1	61,0	0,0336	BELIMO BLE (15 N.m)
550 x 200	-	-	-	-	57,9	62,8	0,0432	BELIMO BLE (15 N.m)
550 x 225	-	-	-	-	59,9	64,9	0,0552	BELIMO BLE (15 N.m)
550 x 250	-	-	-	-	61,9	67,0	0,0672	BELIMO BLE (15 N.m)
550 x 280	-	-	-	-	64,4	69,6	0,0816	BELIMO BLE (15 N.m)
550 x 300	-	-	-	-	66,0	71,4	0,0912	BELIMO BLE (15 N.m)
550 x 315	-	-	-	-	67,3	72,8	0,0984	BELIMO BLE (15 N.m)
550 x 355	-	6,5	-	-	70,5	76,3	0,1176	BELIMO BLE (15 N.m)
550 x 400	-	29	-	-	74,3	80,1	0,1392	BELIMO BLE (15 N.m)
550 x 450	-	54	-	4	78,3	84,5	0,1632	BELIMO BLE (15 N.m)
550 x 500	-	79	-	29	82,4	88,9	0,1872	BELIMO BLE (15 N.m)
550 x 550	-	104	-	54	86,5	93,3	0,2112	BELIMO BLE (15 N.m)
550 x 560	-	109	-	59	87,4	94,1	0,2160	BELIMO BLE (15 N.m)
550 x 600	-	129	-	79	90,6	97,5	0,2352	BELIMO BLE (15 N.m)

Size AxB	Without flanges		With flanges		Weight [kg]		Effective area S_{ef} [m^2]	Actuating mechanism type
	a	c	e	f	Without flanges	With flanges		
550 x 630	-	144	-	94	93,1	100,1	0,2496	BELIMO BLE (15 N.m)
550 x 650	-	154	-	104	94,8	101,9	0,2592	BELIMO BLE (15 N.m)
550 x 700	11	179	-	129	98,8	106,3	0,2832	BELIMO BLE (15 N.m)
550 x 710	16	184	-	134	99,6	107,1	0,2880	BELIMO BLE (15 N.m)
550 x 750	36	204	-	154	102,9	110,6	0,3072	BELIMO BE (40 N.m)
550 x 800	61	229	11	179	107,0	115,0	0,3312	BELIMO BE (40 N.m)
550 x 900	111	279	61	229	116,5	125,0	0,3792	BELIMO BE (40 N.m)
550 x 1000	161	329	111	279	124,6	133,6	0,4272	BELIMO BE (40 N.m)
560 x 180	-	-	-	-	56,8	61,5	0,0343	BELIMO BLE (15 N.m)
560 x 200	-	-	-	-	58,4	63,4	0,0441	BELIMO BLE (15 N.m)
560 x 225	-	-	-	-	60,5	65,5	0,0564	BELIMO BLE (15 N.m)
560 x 250	-	-	-	-	62,5	67,8	0,0686	BELIMO BLE (15 N.m)
560 x 280	-	-	-	-	65,0	70,4	0,0833	BELIMO BLE (15 N.m)
560 x 300	-	-	-	-	66,6	72,1	0,0931	BELIMO BLE (15 N.m)
560 x 315	-	-	-	-	67,9	73,4	0,1005	BELIMO BLE (15 N.m)
560 x 355	-	6,5	-	-	71,3	76,9	0,1201	BELIMO BLE (15 N.m)
560 x 400	-	29	-	-	74,9	80,9	0,1421	BELIMO BLE (15 N.m)
560 x 450	-	54	-	4	79,0	85,3	0,1666	BELIMO BLE (15 N.m)
560 x 500	-	79	-	29	83,1	89,6	0,1911	BELIMO BLE (15 N.m)
560 x 550	-	104	-	54	87,3	94,0	0,2156	BELIMO BLE (15 N.m)
560 x 560	-	109	-	59	88,1	94,9	0,2205	BELIMO BLE (15 N.m)
560 x 600	-	129	-	79	91,5	98,4	0,2401	BELIMO BLE (15 N.m)
560 x 630	-	144	-	94	93,9	101,1	0,2548	BELIMO BLE (15 N.m)
560 x 650	-	154	-	104	95,6	102,9	0,2646	BELIMO BLE (15 N.m)
560 x 700	11	179	-	129	99,8	107,3	0,2891	BELIMO BLE (15 N.m)
560 x 710	16	184	-	134	100,5	108,1	0,2940	BELIMO BLE (15 N.m)
560 x 750	36	204	-	154	103,9	111,6	0,3136	BELIMO BE (40 N.m)
560 x 800	61	229	11	179	108,0	116,0	0,3381	BELIMO BE (40 N.m)
560 x 900	111	279	61	229	117,5	126,0	0,3871	BELIMO BE (40 N.m)
560 x 1000	161	329	111	279	125,8	134,9	0,4361	BELIMO BE (40 N.m)
600 x 180	-	-	-	-	59,0	64,0	0,0371	BELIMO BLE (15 N.m)
600 x 200	-	-	-	-	60,6	65,9	0,0477	BELIMO BLE (15 N.m)
600 x 225	-	-	-	-	62,8	68,1	0,0610	BELIMO BLE (15 N.m)
600 x 250	-	-	-	-	65,0	70,4	0,0742	BELIMO BLE (15 N.m)
600 x 280	-	-	-	-	67,5	73,0	0,0901	BELIMO BLE (15 N.m)
600 x 300	-	-	-	-	69,3	74,9	0,1007	BELIMO BLE (15 N.m)
600 x 315	-	-	-	-	70,5	76,3	0,1087	BELIMO BLE (15 N.m)
600 x 355	-	6,5	-	-	73,9	79,9	0,1299	BELIMO BLE (15 N.m)
600 x 400	-	29	-	-	77,8	83,9	0,1537	BELIMO BLE (15 N.m)
600 x 450	-	54	-	4	82,0	88,4	0,1802	BELIMO BLE (15 N.m)
600 x 500	-	79	-	29	86,3	92,9	0,2067	BELIMO BLE (15 N.m)
600 x 550	-	104	-	54	90,5	97,5	0,2332	BELIMO BLE (15 N.m)
600 x 560	-	109	-	59	91,4	98,4	0,2385	BELIMO BLE (15 N.m)
600 x 600	-	129	-	79	94,8	102,0	0,2597	BELIMO BLE (15 N.m)
600 x 630	-	144	-	94	97,4	104,8	0,2756	BELIMO BLE (15 N.m)
600 x 650	-	154	-	104	99,0	106,5	0,2862	BELIMO BLE (15 N.m)
600 x 700	11	179	-	129	103,3	111,0	0,3127	BELIMO BLE (15 N.m)
600 x 710	16	184	-	134	104,1	111,9	0,3180	BELIMO BLE (15 N.m)
600 x 750	36	204	-	154	107,5	115,5	0,3392	BELIMO BE (40 N.m)
600 x 800	61	229	11	179	111,8	120,0	0,3657	BELIMO BE (40 N.m)
600 x 900	111	279	61	229	121,6	130,4	0,4187	BELIMO BE (40 N.m)

Size AxB	Without flanges		With flanges		Weight [kg]		Effective area S_{ef} [m^2]	Actuating mechanism type
	a	c	e	f	Without flanges	With flanges		
600 x 1000	161	329	111	279	130,1	139,4	0,4717	BELIMO BE (40 N.m)
630 x 180	-	-	-	-	60,6	65,9	0,0392	BELIMO BLE (15 N.m)
630 x 200	-	-	-	-	62,4	67,6	0,0504	BELIMO BLE (15 N.m)
630 x 225	-	-	-	-	64,6	70,0	0,0644	BELIMO BLE (15 N.m)
630 x 250	-	-	-	-	66,8	72,3	0,0784	BELIMO BLE (15 N.m)
630 x 280	-	-	-	-	69,4	75,1	0,0952	BELIMO BLE (15 N.m)
630 x 300	-	-	-	-	71,1	76,9	0,1064	BELIMO BLE (15 N.m)
630 x 315	-	-	-	-	72,4	78,3	0,1148	BELIMO BLE (15 N.m)
630 x 355	-	6,5	-	-	75,9	82,0	0,1372	BELIMO BLE (15 N.m)
630 x 400	-	29	-	-	79,9	86,1	0,1624	BELIMO BLE (15 N.m)
630 x 450	-	54	-	4	84,1	90,8	0,1904	BELIMO BLE (15 N.m)
630 x 500	-	79	-	29	88,5	95,4	0,2184	BELIMO BLE (15 N.m)
630 x 550	-	104	-	54	92,9	100,0	0,2464	BELIMO BLE (15 N.m)
630 x 560	-	109	-	59	93,8	100,9	0,2520	BELIMO BLE (15 N.m)
630 x 600	-	129	-	79	97,3	104,6	0,2744	BELIMO BLE (15 N.m)
630 x 630	-	144	-	94	99,9	107,4	0,2912	BELIMO BLE (15 N.m)
630 x 650	-	154	-	104	101,6	109,3	0,3024	BELIMO BLE (15 N.m)
630 x 700	11	179	-	129	106,0	113,9	0,3304	BELIMO BLE (15 N.m)
630 x 710	16	184	-	134	106,9	114,8	0,3360	BELIMO BLE (15 N.m)
630 x 750	36	204	-	154	110,4	118,5	0,3584	BELIMO BE (40 N.m)
630 x 800	61	229	11	179	114,8	123,1	0,3864	BELIMO BE (40 N.m)
630 x 900	111	279	61	229	124,6	133,6	0,4424	BELIMO BE (40 N.m)
630 x 1000	161	329	111	279	133,4	142,9	0,4984	BELIMO BE (40 N.m)
650 x 180	-	-	-	-	61,8	67,1	0,0406	BELIMO BLE (15 N.m)
650 x 200	-	-	-	-	63,5	68,9	0,0522	BELIMO BLE (15 N.m)
650 x 225	-	-	-	-	65,8	71,3	0,0667	BELIMO BLE (15 N.m)
650 x 250	-	-	-	-	68,0	73,6	0,0812	BELIMO BLE (15 N.m)
650 x 280	-	-	-	-	70,6	76,4	0,0986	BELIMO BLE (15 N.m)
650 x 300	-	-	-	-	72,4	78,3	0,1102	BELIMO BLE (15 N.m)
650 x 315	-	-	-	-	73,8	79,8	0,1189	BELIMO BLE (15 N.m)
650 x 355	-	6,5	-	-	77,3	83,5	0,1421	BELIMO BLE (15 N.m)
650 x 400	-	29	-	-	81,3	87,6	0,1682	BELIMO BLE (15 N.m)
650 x 450	-	54	-	4	85,6	92,4	0,1972	BELIMO BLE (15 N.m)
650 x 500	-	79	-	29	90,1	97,0	0,2262	BELIMO BLE (15 N.m)
650 x 550	-	104	-	54	94,5	101,8	0,2552	BELIMO BLE (15 N.m)
650 x 560	-	109	-	59	95,4	102,6	0,2610	BELIMO BLE (15 N.m)
650 x 600	-	129	-	79	98,9	106,4	0,2842	BELIMO BLE (15 N.m)
650 x 630	-	144	-	94	101,6	109,3	0,3016	BELIMO BLE (15 N.m)
650 x 650	-	154	-	104	103,4	111,1	0,3132	BELIMO BLE (15 N.m)
650 x 700	11	179	-	129	107,8	115,8	0,3422	BELIMO BLE (15 N.m)
650 x 710	16	184	-	134	108,6	116,8	0,3480	BELIMO BLE (15 N.m)
650 x 750	36	204	-	154	112,3	120,5	0,3712	BELIMO BE (40 N.m)
650 x 800	61	229	11	179	117,9	126,4	0,4002	BELIMO BE (40 N.m)
650 x 900	111	279	61	229	126,8	135,8	0,4582	BELIMO BE (40 N.m)
650 x 1000	161	329	111	279	135,6	145,1	0,5162	BELIMO BE (40 N.m)
700 x 180	-	-	-	-	64,5	66,2	0,0441	BELIMO BLE (15 N.m)
700 x 200	-	-	-	-	66,4	68,0	0,0567	BELIMO BLE (15 N.m)
700 x 225	-	-	-	-	68,8	70,3	0,0725	BELIMO BLE (15 N.m)
700 x 250	-	-	-	-	71,0	72,6	0,0882	BELIMO BLE (15 N.m)
700 x 280	-	-	-	-	73,8	75,4	0,1071	BELIMO BLE (15 N.m)
700 x 300	-	-	-	-	75,6	77,2	0,1197	BELIMO BLE (15 N.m)

Size AxB	Without flanges		With flanges		Weight [kg]		Effective area S_{ef} [m^2]	Actuating mechanism type
	a	c	e	f	Without flanges	With flanges		
700 x 315	-	-	-	-	77,0	78,6	0,1292	BELIMO BLE (15 N.m)
700 x 355	-	6,5	-	-	80,6	82,2	0,1544	BELIMO BLE (15 N.m)
700 x 400	-	29	-	-	84,8	86,4	0,1827	BELIMO BLE (15 N.m)
700 x 450	-	54	-	4	89,4	90,9	0,2142	BELIMO BLE (15 N.m)
700 x 500	-	79	-	29	93,9	95,5	0,2457	BELIMO BLE (15 N.m)
700 x 550	-	104	-	54	98,5	100,1	0,2772	BELIMO BLE (15 N.m)
700 x 560	-	109	-	59	99,4	101,0	0,2835	BELIMO BLE (15 N.m)
700 x 600	-	129	-	79	103,1	104,7	0,3087	BELIMO BLE (15 N.m)
700 x 630	-	144	-	94	105,9	107,4	0,3276	BELIMO BE (40 N.m)
700 x 650	-	154	-	104	107,6	109,2	0,3402	BELIMO BE (40 N.m)
700 x 700	11	179	-	129	112,3	113,8	0,3717	BELIMO BE (40 N.m)
700 x 710	16	184	-	134	113,1	114,7	0,3780	BELIMO BE (40 N.m)
700 x 750	36	204	-	154	116,9	118,4	0,4032	BELIMO BE (40 N.m)
700 x 800	61	229	11	179	122,8	124,1	0,4347	BELIMO BE (40 N.m)
700 x 900	111	279	61	229	131,9	133,2	0,4977	BELIMO BE (40 N.m)
700 x 1000	161	329	111	279	141,0	142,4	0,5607	BELIMO BE (40 N.m)
710 x 180	-	-	-	-	63,6	69,1	0,0448	BELIMO BLE (15 N.m)
710 x 200	-	-	-	-	65,4	70,9	0,0576	BELIMO BLE (15 N.m)
710 x 225	-	-	-	-	67,6	73,3	0,0736	BELIMO BLE (15 N.m)
710 x 250	-	-	-	-	69,9	75,8	0,0896	BELIMO BLE (15 N.m)
710 x 280	-	-	-	-	72,6	78,6	0,1088	BELIMO BLE (15 N.m)
710 x 300	-	-	-	-	74,4	80,5	0,1216	BELIMO BLE (15 N.m)
710 x 315	-	-	-	-	75,8	81,9	0,1312	BELIMO BLE (15 N.m)
710 x 355	-	6,5	-	-	79,3	85,6	0,1568	BELIMO BLE (15 N.m)
710 x 400	-	29	-	-	83,4	90,0	0,1856	BELIMO BLE (15 N.m)
710 x 450	-	54	-	4	87,8	94,8	0,2176	BELIMO BLE (15 N.m)
710 x 500	-	79	-	29	92,4	99,6	0,2496	BELIMO BLE (15 N.m)
710 x 550	-	104	-	54	96,9	104,3	0,2816	BELIMO BLE (15 N.m)
710 x 560	-	109	-	59	97,8	105,2	0,2880	BELIMO BLE (15 N.m)
710 x 600	-	129	-	79	101,4	109,1	0,3136	BELIMO BLE (15 N.m)
710 x 630	-	144	-	94	102,4	111,9	0,3328	BELIMO BE (40 N.m)
710 x 650	-	154	-	104	104,2	113,8	0,3456	BELIMO BE (40 N.m)
710 x 700	11	179	-	129	108,6	118,6	0,3776	BELIMO BE (40 N.m)
710 x 710	16	184	-	134	109,6	119,6	0,3840	BELIMO BE (40 N.m)
710 x 750	36	204	-	154	113,0	123,3	0,4096	BELIMO BE (40 N.m)
710 x 800	61	229	11	179	118,7	129,3	0,4416	BELIMO BE (40 N.m)
710 x 900	111	279	61	229	127,6	138,8	0,5056	BELIMO BE (40 N.m)
710 x 1000	161	329	111	279	136,4	148,4	0,5696	BELIMO BE (40 N.m)
750 x 180	-	-	-	-	64,7	70,2	0,0476	BELIMO BLE (15 N.m)
750 x 200	-	-	-	-	66,5	72,1	0,0612	BELIMO BLE (15 N.m)
750 x 225	-	-	-	-	68,8	74,6	0,0782	BELIMO BLE (15 N.m)
750 x 250	-	-	-	-	71,0	77,0	0,0952	BELIMO BLE (15 N.m)
750 x 280	-	-	-	-	73,8	79,9	0,1156	BELIMO BLE (15 N.m)
750 x 300	-	-	-	-	75,6	81,8	0,1292	BELIMO BLE (15 N.m)
750 x 315	-	-	-	-	76,9	83,3	0,1394	BELIMO BLE (15 N.m)
750 x 355	-	6,5	-	-	80,6	87,1	0,1666	BELIMO BLE (15 N.m)
750 x 400	-	29	-	-	84,7	91,4	0,1972	BELIMO BLE (15 N.m)
750 x 450	-	54	-	4	89,3	96,2	0,2312	BELIMO BLE (15 N.m)
750 x 500	-	79	-	29	93,8	101,0	0,2652	BELIMO BLE (15 N.m)
750 x 550	-	104	-	54	98,4	105,8	0,2992	BELIMO BLE (15 N.m)
750 x 560	-	109	-	59	99,4	106,8	0,3060	BELIMO BLE (15 N.m)

Size AxB	Without flanges		With flanges		Weight [kg]		Effective area S_{ef} [m²]	Actuating mechanism type
	a	c	e	f	Without flanges	With flanges		
750 x 600	-	129	-	79	103,0	110,6	0,3332	BELIMO BLE (15 N.m)
750 x 630	-	144	-	94	105,7	113,5	0,3536	BELIMO BE (40 N.m)
750 x 650	-	154	-	104	107,5	115,4	0,3672	BELIMO BE (40 N.m)
750 x 700	11	179	-	129	112,1	120,2	0,4012	BELIMO BE (40 N.m)
750 x 710	16	184	-	134	113,0	121,2	0,4080	BELIMO BE (40 N.m)
750 x 750	36	204	-	154	117,8	126,2	0,4352	BELIMO BE (40 N.m)
750 x 800	61	229	11	179	122,4	131,0	0,4692	BELIMO BE (40 N.m)
750 x 900	111	279	61	229	131,5	140,8	0,5372	BELIMO BE (40 N.m)
750 x 1000	161	329	111	279	143,0	152,9	0,6052	BELIMO BE (40 N.m)
800 x 180	-	-	-	-	68,4	74,4	0,0511	BELIMO BLE (15 N.m)
800 x 200	-	-	-	-	70,4	76,4	0,0657	BELIMO BLE (15 N.m)
800 x 225	-	-	-	-	72,8	78,9	0,0840	BELIMO BLE (15 N.m)
800 x 250	-	-	-	-	75,2	81,5	0,1022	BELIMO BLE (15 N.m)
800 x 280	-	-	-	-	78,1	84,5	0,1241	BELIMO BLE (15 N.m)
800 x 300	-	-	-	-	79,9	86,5	0,1387	BELIMO BLE (15 N.m)
800 x 315	-	-	-	-	81,4	88,1	0,1497	BELIMO BLE (15 N.m)
800 x 355	-	6,5	-	-	85,3	92,1	0,1789	BELIMO BLE (15 N.m)
800 x 400	-	29	-	-	89,5	96,6	0,2117	BELIMO BLE (15 N.m)
800 x 450	-	54	-	4	94,3	101,6	0,2482	BELIMO BLE (15 N.m)
800 x 500	-	79	-	29	99,2	106,8	0,2847	BELIMO BLE (15 N.m)
800 x 550	-	104	-	54	103,9	111,8	0,3212	BELIMO BLE (15 N.m)
800 x 560	-	109	-	59	104,9	112,7	0,3285	BELIMO BLE (15 N.m)
800 x 600	-	129	-	79	108,7	116,8	0,3577	BELIMO BE (40 N.m)
800 x 630	-	144	-	94	111,6	119,8	0,3796	BELIMO BE (40 N.m)
800 x 650	-	154	-	104	113,6	121,9	0,3942	BELIMO BE (40 N.m)
800 x 700	11	179	-	129	118,3	126,9	0,4307	BELIMO BE (40 N.m)
800 x 710	16	184	-	134	119,3	127,9	0,4380	BELIMO BE (40 N.m)
800 x 750	36	204	-	154	124,3	133,2	0,4672	BELIMO BE (40 N.m)
800 x 800	61	229	11	179	129,2	138,2	0,5037	BELIMO BE (40 N.m)
800 x 900	111	279	61	229	138,7	148,4	0,5767	BELIMO BE (40 N.m)
800 x 1000	161	329	111	279	148,4	158,5	0,6497	BELIMO BE (40 N.m)
900 x 180	-	-	-	-	72,7	72,5	0,0581	BELIMO BLE (15 N.m)
900 x 200	-	-	-	-	74,8	81,1	0,0747	BELIMO BLE (15 N.m)
900 x 225	-	-	-	-	77,3	83,8	0,0955	BELIMO BLE (15 N.m)
900 x 250	-	-	-	-	79,8	86,4	0,1162	BELIMO BLE (15 N.m)
900 x 280	-	-	-	-	82,8	89,6	0,1411	BELIMO BLE (15 N.m)
900 x 300	-	-	-	-	84,7	91,7	0,1577	BELIMO BLE (15 N.m)
900 x 315	-	-	-	-	86,3	93,4	0,1702	BELIMO BLE (15 N.m)
900 x 355	-	6,5	-	-	90,2	97,6	0,2034	BELIMO BLE (15 N.m)
900 x 400	-	29	-	-	94,8	102,2	0,2407	BELIMO BLE (15 N.m)
900 x 450	-	54	-	4	99,8	107,5	0,2822	BELIMO BLE (15 N.m)
900 x 500	-	79	-	29	104,9	112,8	0,3237	BELIMO BE (40 N.m)
900 x 550	-	104	-	54	109,9	118,1	0,3652	BELIMO BE (40 N.m)
900 x 560	-	109	-	59	110,9	119,2	0,3735	BELIMO BE (40 N.m)
900 x 600	-	129	-	79	115,0	123,4	0,4067	BELIMO BE (40 N.m)
900 x 630	-	144	-	94	118,0	126,6	0,4316	BELIMO BE (40 N.m)
900 x 650	-	154	-	104	120,0	128,6	0,4482	BELIMO BE (40 N.m)
900 x 700	11	179	-	129	126,2	135,1	0,4897	BELIMO BE (40 N.m)
900 x 710	16	184	-	134	127,2	136,2	0,4980	BELIMO BE (40 N.m)
900 x 750	36	204	-	154	131,3	140,4	0,5312	BELIMO BE (40 N.m)
900 x 800	61	229	11	179	136,3	145,7	0,5727	BELIMO BE (40 N.m)

Size AxB	Without flanges		With flanges		Weight [kg]		Effective area S_{ef} [m^2]	Actuating mechanism type
	a	c	e	f	Without flanges	With flanges		
900 x 900	111	279	61	229	146,3	156,2	0,6557	BELIMO BE (40 N.m)
900 x 1000	161	329	111	279	156,4	166,8	0,7387	BELIMO BE (40 N.m)
1000 x 180	-	-	-	-	78,1	83,5	0,0651	BELIMO BLE (15 N.m)
1000 x 200	-	-	-	-	80,2	85,7	0,0837	BELIMO BLE (15 N.m)
1000 x 225	-	-	-	-	82,9	88,5	0,1070	BELIMO BLE (15 N.m)
1000 x 250	-	-	-	-	85,6	91,2	0,1302	BELIMO BLE (15 N.m)
1000 x 280	-	-	-	-	88,8	94,5	0,1581	BELIMO BLE (15 N.m)
1000 x 300	-	-	-	-	90,8	96,8	0,1767	BELIMO BLE (15 N.m)
1000 x 315	-	-	-	-	92,5	98,4	0,1907	BELIMO BLE (15 N.m)
1000 x 355	-	6,5	-	-	96,7	102,8	0,2279	BELIMO BLE (15 N.m)
1000 x 400	-	29	-	-	101,5	107,7	0,2697	BELIMO BLE (15 N.m)
1000 x 450	-	54	-	4	106,9	113,2	0,3162	BELIMO BE (40 N.m)
1000 x 500	-	79	-	29	112,2	118,7	0,3627	BELIMO BE (40 N.m)
1000 x 550	-	104	-	54	117,6	124,1	0,4092	BELIMO BE (40 N.m)
1000 x 560	-	109	-	59	118,7	125,3	0,4185	BELIMO BE (40 N.m)
1000 x 600	-	129	-	79	122,9	129,7	0,4557	BELIMO BE (40 N.m)
1000 x 630	-	144	-	94	126,1	133,0	0,4836	BELIMO BE (40 N.m)
1000 x 650	-	154	-	104	129,5	136,4	0,5022	BELIMO BE (40 N.m)
1000 x 700	11	179	-	129	134,8	141,8	0,5487	BELIMO BE (40 N.m)
1000 x 710	16	184	-	134	135,8	143,0	0,5580	BELIMO BE (40 N.m)
1000 x 750	36	204	-	154	140,2	147,4	0,5952	BELIMO BE (40 N.m)
1000 x 800	61	229	11	179	145,4	152,8	0,6417	BELIMO BE (40 N.m)
1000 x 900	111	279	61	229	156,1	163,9	0,7347	BELIMO BE (40 N.m)
1000 x 1000	161	329	111	279	166,8	174,9	0,8277	BELIMO BE (40 N.m)
1100 x 180	-	-	-	-	83,4	87,1	0,0721	BELIMO BLE (15 N.m)
1100 x 200	-	-	-	-	85,7	89,2	0,0927	BELIMO BLE (15 N.m)
1100 x 225	-	-	-	-	88,6	92,1	0,1185	BELIMO BLE (15 N.m)
1100 x 250	-	-	-	-	91,3	95,0	0,1442	BELIMO BLE (15 N.m)
1100 x 280	-	-	-	-	94,7	98,3	0,1751	BELIMO BLE (15 N.m)
1100 x 300	-	-	-	-	97,0	100,6	0,1957	BELIMO BLE (15 N.m)
1100 x 315	-	-	-	-	98,6	102,2	0,2112	BELIMO BLE (15 N.m)
1100 x 355	-	6,5	-	-	103,2	106,8	0,2524	BELIMO BLE (15 N.m)
1100 x 400	-	29	-	-	108,2	111,9	0,2987	BELIMO BE (40 N.m)
1100 x 450	-	54	-	4	114,0	117,5	0,3502	BELIMO BE (40 N.m)
1100 x 500	-	79	-	29	119,6	123,2	0,4017	BELIMO BE (40 N.m)
1100 x 550	-	104	-	54	125,3	128,9	0,4532	BELIMO BE (40 N.m)
1100 x 560	-	109	-	59	126,4	130,0	0,4635	BELIMO BE (40 N.m)
1100 x 600	-	129	-	79	130,9	134,6	0,5047	BELIMO BE (40 N.m)
1100 x 630	-	144	-	94	135,5	139,0	0,5356	BELIMO BE (40 N.m)
1100 x 650	-	154	-	104	137,8	141,3	0,5562	BELIMO BE (40 N.m)
1100 x 700	11	179	-	129	143,4	147,0	0,6077	BELIMO BE (40 N.m)
1100 x 710	16	184	-	134	144,6	148,1	0,6180	BELIMO BE (40 N.m)
1100 x 750	36	204	-	154	149,0	152,6	0,6592	BELIMO BE (40 N.m)
1100 x 800	61	229	11	179	154,7	158,4	0,7107	BELIMO BE (40 N.m)
1100 x 900	111	279	61	229	166,1	169,6	0,8137	BELIMO BE (40 N.m)
1100 x 1000	161	329	111	279	177,4	180,9	0,9167	BELIMO BE (40 N.m)
1250 x 180	-	-	-	-	91,4	97,9	0,0826	BELIMO BLE (15 N.m)
1250 x 200	-	-	-	-	94,0	100,4	0,1062	BELIMO BLE (15 N.m)
1250 x 225	-	-	-	-	97,0	103,6	0,1357	BELIMO BLE (15 N.m)
1250 x 250	-	-	-	-	100,1	106,7	0,1652	BELIMO BLE (15 N.m)
1250 x 280	-	-	-	-	103,7	110,4	0,2006	BELIMO BLE (15 N.m)

Size AxB	Without flanges		With flanges		Weight [kg]		Effective area S_{ef} [m^2]	Actuating mechanism type
	a	c	e	f	Without flanges	With flanges		
1250 x 300	-	-	-	-	106,2	113,0	0,2242	BELIMO BLE (15 N.m)
1250 x 315	-	-	-	-	108,0	114,8	0,2419	BELIMO BLE (15 N.m)
1250 x 355	-	6,5	-	-	112,9	119,9	0,2891	BELIMO BE (40 N.m)
1250 x 400	-	29	-	-	118,4	125,6	0,3422	BELIMO BE (40 N.m)
1250 x 450	-	54	-	4	124,6	131,8	0,4012	BELIMO BE (40 N.m)
1250 x 500	-	79	-	29	130,7	138,1	0,4602	BELIMO BE (40 N.m)
1250 x 550	-	104	-	54	136,8	144,3	0,5192	BELIMO BE (40 N.m)
1250 x 560	-	109	-	59	138,0	145,5	0,5310	BELIMO BE (40 N.m)
1250 x 600	-	129	-	79	144,1	151,7	0,5782	BELIMO BE (40 N.m)
1250 x 630	-	144	-	94	147,7	155,5	0,6136	BELIMO BE (40 N.m)
1250 x 650	-	154	-	104	150,2	158,0	0,6372	BELIMO BE (40 N.m)
1250 x 700	11	179	-	129	156,4	164,3	0,6962	BELIMO BE (40 N.m)
1250 x 710	16	184	-	134	157,6	165,6	0,7080	BELIMO BE (40 N.m)
1250 x 750	36	204	-	154	162,5	170,5	0,7552	BELIMO BE (40 N.m)
1250 x 800	61	229	11	179	168,6	176,8	0,8142	BELIMO BE (40 N.m)
1250 x 900	111	279	61	229	180,8	189,4	0,9322	BELIMO BE (40 N.m)
1250 x 1000	161	329	111	279	192,9	204,6	1,0502	SCHISCHEK InMax 50.75S (75 N.m)
1400 x 180	-	-	-	-	95,3	104,0	0,0931	BELIMO BLE (15 N.m)
1400 x 200	-	-	-	-	97,9	106,5	0,1197	BELIMO BLE (15 N.m)
1400 x 225	-	-	-	-	101,1	109,8	0,1530	BELIMO BLE (15 N.m)
1400 x 250	-	-	-	-	104,2	113,0	0,1862	BELIMO BLE (15 N.m)
1400 x 280	-	-	-	-	108,0	117,0	0,2261	BELIMO BLE (15 N.m)
1400 x 300	-	-	-	-	110,5	119,6	0,2527	BELIMO BLE (15 N.m)
1400 x 315	-	-	-	-	112,5	121,6	0,2727	BELIMO BLE (15 N.m)
1400 x 355	-	6,5	-	-	117,4	126,8	0,3259	BELIMO BE (40 N.m)
1400 x 400	-	29	-	-	123,2	132,7	0,3857	BELIMO BE (40 N.m)
1400 x 450	-	54	-	4	129,5	139,3	0,4522	BELIMO BE (40 N.m)
1400 x 500	-	79	-	29	135,8	145,8	0,5187	BELIMO BE (40 N.m)
1400 x 550	-	104	-	54	143,3	153,5	0,5852	BELIMO BE (40 N.m)
1400 x 560	-	109	-	59	144,6	154,9	0,5985	BELIMO BE (40 N.m)
1400 x 600	-	129	-	79	149,6	160,1	0,6517	BELIMO BE (40 N.m)
1400 x 630	-	144	-	94	153,4	164,1	0,6916	BELIMO BE (40 N.m)
1400 x 650	-	154	-	104	155,9	166,6	0,7182	BELIMO BE (40 N.m)
1400 x 700	11	179	-	129	162,2	173,2	0,7847	BELIMO BE (40 N.m)
1400 x 710	16	184	-	134	163,4	174,6	0,7980	BELIMO BE (40 N.m)
1400 x 750	36	204	-	154	168,5	179,7	0,8512	BELIMO BE (40 N.m)
1400 x 800	61	229	11	179	174,8	186,3	0,9177	BELIMO BE (40 N.m)
1400 x 900	111	279	61	229	195,3	207,2	1,0507	SCHISCHEK InMax 50.75S (75 N.m)
1400 x 1000	161	329	111	279	207,9	220,3	1,1837	SCHISCHEK InMax 50.75S (75 N.m)
1500 x 180	-	-	-	-	100,5	109,5	0,1001	BELIMO BLE (15 N.m)
1500 x 200	-	-	-	-	103,2	112,2	0,1287	BELIMO BLE (15 N.m)
1500 x 225	-	-	-	-	106,5	115,7	0,1645	BELIMO BLE (15 N.m)
1500 x 250	-	-	-	-	109,8	119,1	0,2002	BELIMO BLE (15 N.m)
1500 x 280	-	-	-	-	113,7	123,3	0,2431	BELIMO BLE (15 N.m)
1500 x 300	-	-	-	-	116,4	125,9	0,2717	BELIMO BLE (15 N.m)
1500 x 315	-	-	-	-	118,3	128,0	0,2932	BELIMO BE (40 N.m)
1500 x 355	-	6,5	-	-	123,6	133,5	0,3504	BELIMO BE (40 N.m)
1500 x 400	-	29	-	-	129,6	139,7	0,4147	BELIMO BE (40 N.m)
1500 x 450	-	54	-	4	136,3	146,5	0,4862	BELIMO BE (40 N.m)
1500 x 500	-	79	-	29	142,8	153,4	0,5577	BELIMO BE (40 N.m)
1500 x 550	-	104	-	54	150,7	161,5	0,6292	BELIMO BE (40 N.m)

Size AxB	Without flanges		With flanges		Weight [kg]		Effective area S_{ef} [m²]	Actuating mechanism type
	a	c	e	f	Without flanges	With flanges		
1500 x 560	-	109	-	59	151,9	162,7	0,6435	BELIMO BE (40 N.m)
1500 x 600	-	129	-	79	157,2	168,2	0,7007	BELIMO BE (40 N.m)
1500 x 630	-	144	-	94	161,2	172,4	0,7436	BELIMO BE (40 N.m)
1500 x 650	-	154	-	104	163,9	175,1	0,7722	BELIMO BE (40 N.m)
1500 x 700	11	179	-	129	170,4	181,9	0,8437	BELIMO BE (40 N.m)
1500 x 710	16	184	-	134	171,8	183,3	0,8580	BELIMO BE (40 N.m)
1500 x 750	36	204	-	154	177,1	188,8	0,9152	BELIMO BE (40 N.m)
1500 x 800	61	229	11	179	183,7	195,6	0,9867	BELIMO BE (40 N.m)
1500 x 900	111	279	61	229	204,7	217,2	1,1297	SCHISCHEK InMax 50.75S (75 N.m)
1500 x 1000	161	329	111	279	217,9	230,9	1,2727	SCHISCHEK InMax 50.75S (75 N.m)
1600 x 180	-	-	-	-	105,7	115,1	0,1071	BELIMO BLE (15 N.m)
1600 x 200	-	-	-	-	108,4	118,0	0,1377	BELIMO BLE (15 N.m)
1600 x 225	-	-	-	-	111,9	121,6	0,1760	BELIMO BLE (15 N.m)
1600 x 250	-	-	-	-	115,3	125,1	0,2142	BELIMO BLE (15 N.m)
1600 x 280	-	-	-	-	119,5	129,5	0,2601	BELIMO BLE (15 N.m)
1600 x 300	-	-	-	-	122,2	132,4	0,2907	BELIMO BE (40 N.m)
1600 x 315	-	-	-	-	124,3	134,4	0,3137	BELIMO BE (40 N.m)
1600 x 355	-	6,5	-	-	129,8	140,2	0,3749	BELIMO BE (40 N.m)
1600 x 400	-	29	-	-	136,0	146,6	0,4437	BELIMO BE (40 N.m)
1600 x 450	-	54	-	4	142,9	153,8	0,5202	BELIMO BE (40 N.m)
1600 x 500	-	79	-	29	149,8	160,9	0,5967	BELIMO BE (40 N.m)
1600 x 550	-	104	-	54	158,0	169,3	0,6732	BELIMO BE (40 N.m)
1600 x 560	-	109	-	59	159,4	170,7	0,6885	BELIMO BE (40 N.m)
1600 x 600	-	129	-	79	164,9	176,4	0,7497	BELIMO BE (40 N.m)
1600 x 630	-	144	-	94	169,1	180,7	0,7956	BELIMO BE (40 N.m)
1600 x 650	-	154	-	104	171,8	183,5	0,8262	BELIMO BE (40 N.m)
1600 x 700	11	179	-	129	178,7	190,7	0,9027	BELIMO BE (40 N.m)
1600 x 710	16	184	-	134	180,1	192,2	0,9180	BELIMO BE (40 N.m)
1600 x 750	36	204	-	154	185,6	197,8	0,9792	BELIMO BE (40 N.m)
1600 x 800	61	229	11	179	192,5	205,0	1,0557	BELIMO BE (40 N.m)
1600 x 900	111	279	61	229	214,1	227,1	1,2087	SCHISCHEK InMax 50.75S (75 N.m)
1600 x 1000	161	329	111	279	228,0	241,4	1,3617	SCHISCHEK InMax 50.75S (75 N.m)

If is used the communication and supply device BKNE230-24, the weight is higher by 0,68 kg.

Fig. 13 Installation opening

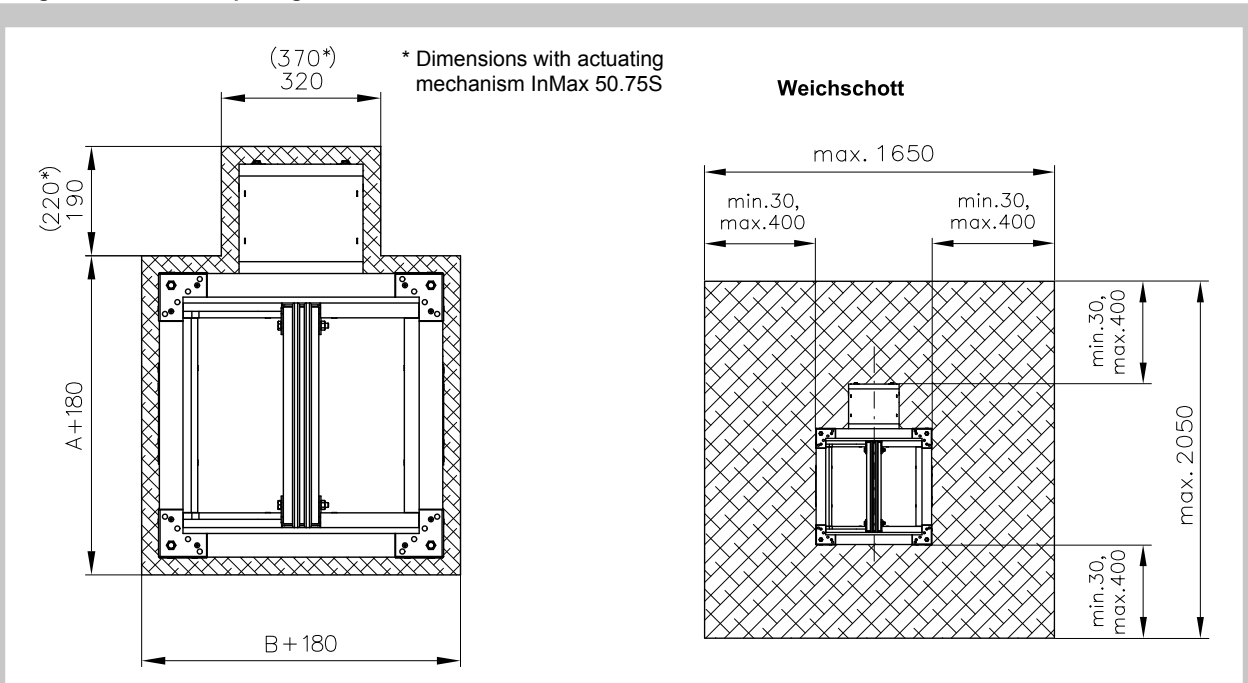

Fig. 14 Flanges

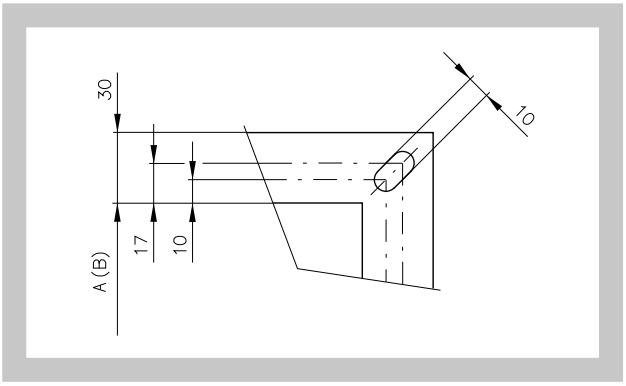

4.3. For damper without flanges (Fig. 15) the open damper blade overlaps the damper body from dimension B = 250 by the value “c” or “a” and “c”. These values are specified in the Tab. 4.2.1.

For damper without flanges (Fig. 16) the open damper blade overlaps the damper body from dimension B = 355 by the value “f” or “e” and “f”. These values are specified in the Tab. 4.2.1.

Values "a","c","e" and "f", has to be respected when projecting related smoke exhaust ducts.

Fig. 15 Values “a” a “c”

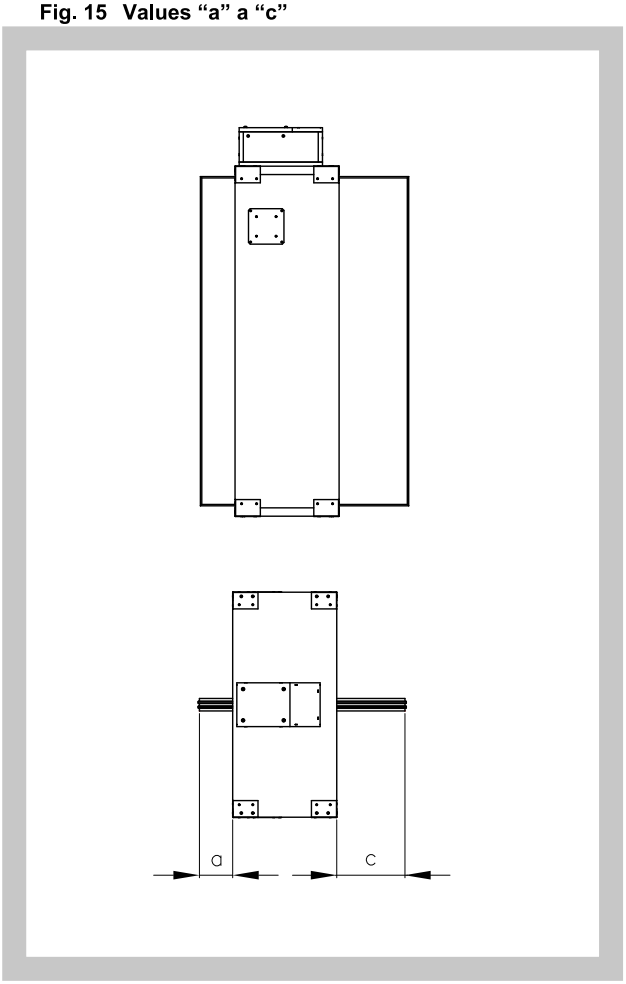

Fig. 16 Values “e” a “f”

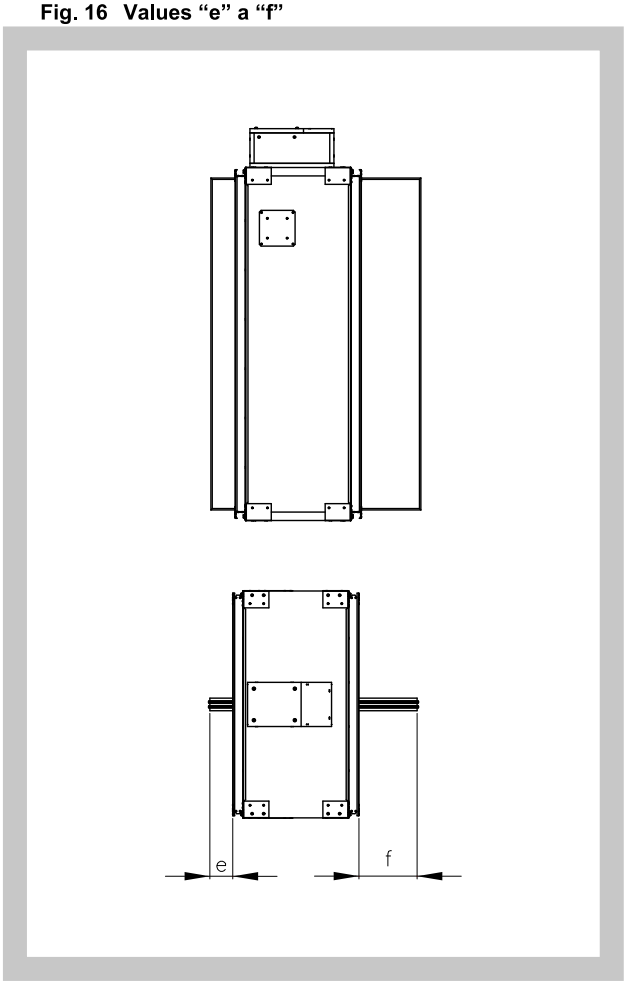

5. Placement and Assembly

5.1. Smoke extraction dampers - multi are designed to remove heat and combustion products (e.g. smoke) from fire compartments according EN 1366-8.
Smoke extraction dampers - multi are designed to horizontal or vertical installation with arbitrary blade axis position.
To provide needed access space to the control device, all other objects must be situated at least 350 mm from the control parts of the damper.

5.2. The distance between the smoke damper:
- distance 200 mm between dampers installed in the duct;
- distance 75 mm between damper and construction (wall/ceiling).

5.3. During installation the damper blade must be in position “CLOSED”. The damper body should not be deformed in the course of installation. Once the damper built in, its blade should not grind on the damper casing during opening or closing.

5.4. Installation examples

Tab. 5.4.1. Statement of installations

Placement	Filling of space between damper and wall	Figure
In solid wall construction	mineral stone wool, surface is covered by fire protection mastic and cement lime plate	17, 18
	mortar or gypsum	19, 20
	Weichschott	21, 22
In solid ceiling construction	mineral stone wool, surface is covered by fire protection mastic and cement lime plate	23, 24
	mortar or gypsum	25, 26
	Weichschott	27, 28
In gypsum wall construction	mineral stone wool, surface is covered by fire protection mastic and cement lime plate	29
	mortar or gypsum	30, 31
	Weichschott	32, 33
On solid wall construction	-	34, 35
On solid ceiling construction	-	36, 37
Vertical duct installation	-	38
Horizontal duct installation	-	39

5.4.1. Installation in solid wall or ceiling construction of fire compartment

Fig. 17 Example of installation in solid wall construction of fire compartment - vertical blade axis position.

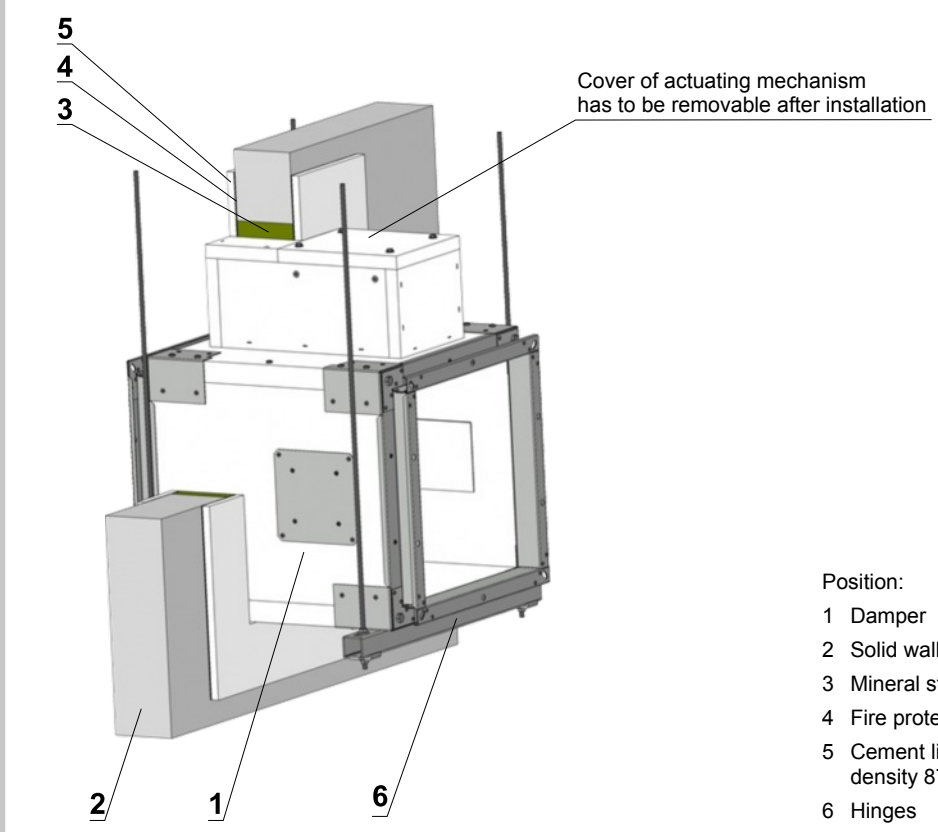

Position:
1 Damper SEDM
2 Solid wall construction
3 Mineral stone wool, density 140 kg/m^3
4 Fire protection mastic, thickness 1 mm
5 Cement lime plate, thickness 15 mm, density 870 kg/m^3
6 Hinges

Fig. 18 Example of installation in solid wall construction of fire compartment - horizontal blade axis position.

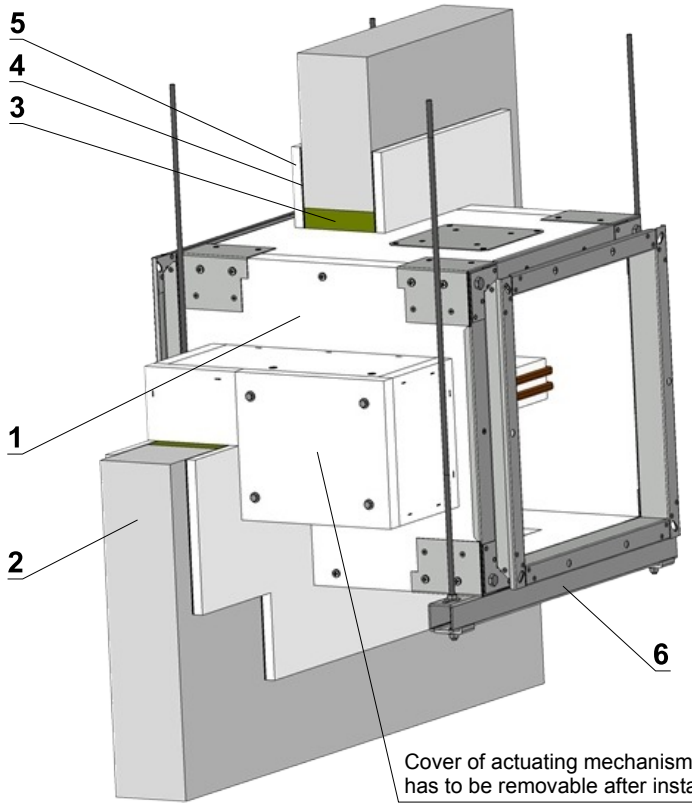

Position:

1 Damper SEDM
2 Solid wall construction
3 Mineral stone wool, density 140 kg/m³
4 Fire protection mastic, thickness 1 mm
5 Cement lime plate, thickness 15 mm, density 870 kg/m³
6 Hinges

Fig. 19 Example of installation in solid wall construction of fire compartment - vertical blade axis position.

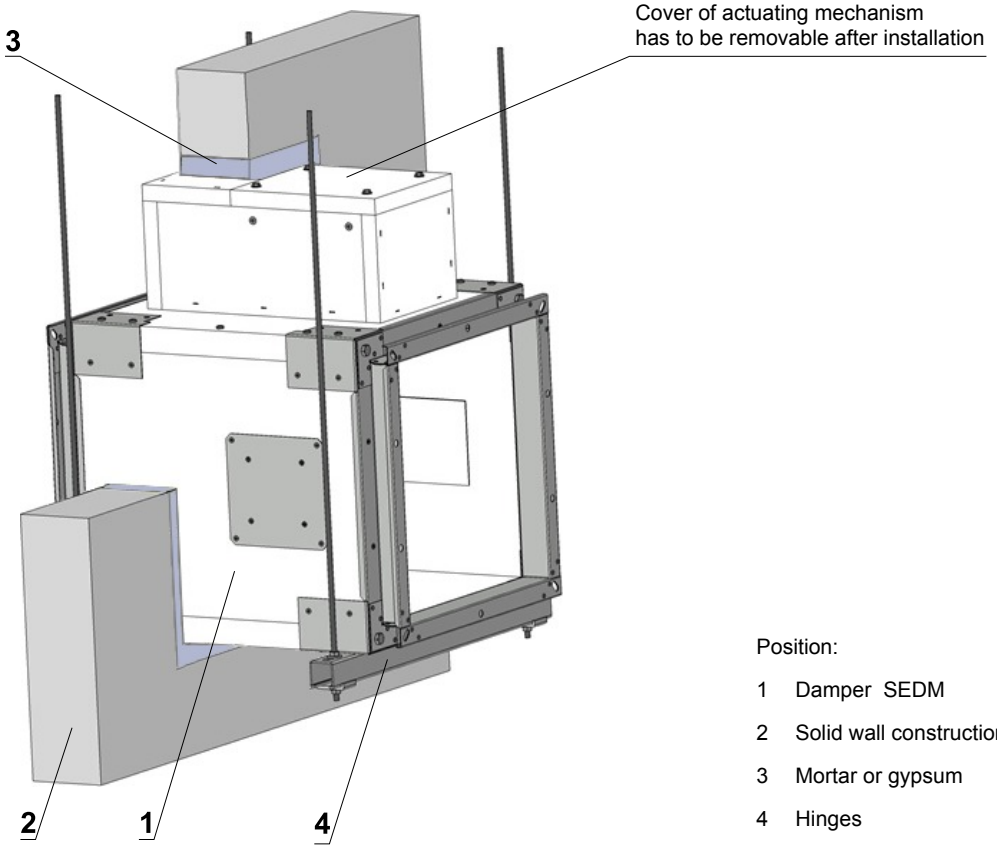

Position:

1 Damper SEDM
2 Solid wall construction
3 Mortar or gypsum
4 Hinges

Fig. 20 Example of installation in solid wall construction of fire compartment - horizontal blade axis position.

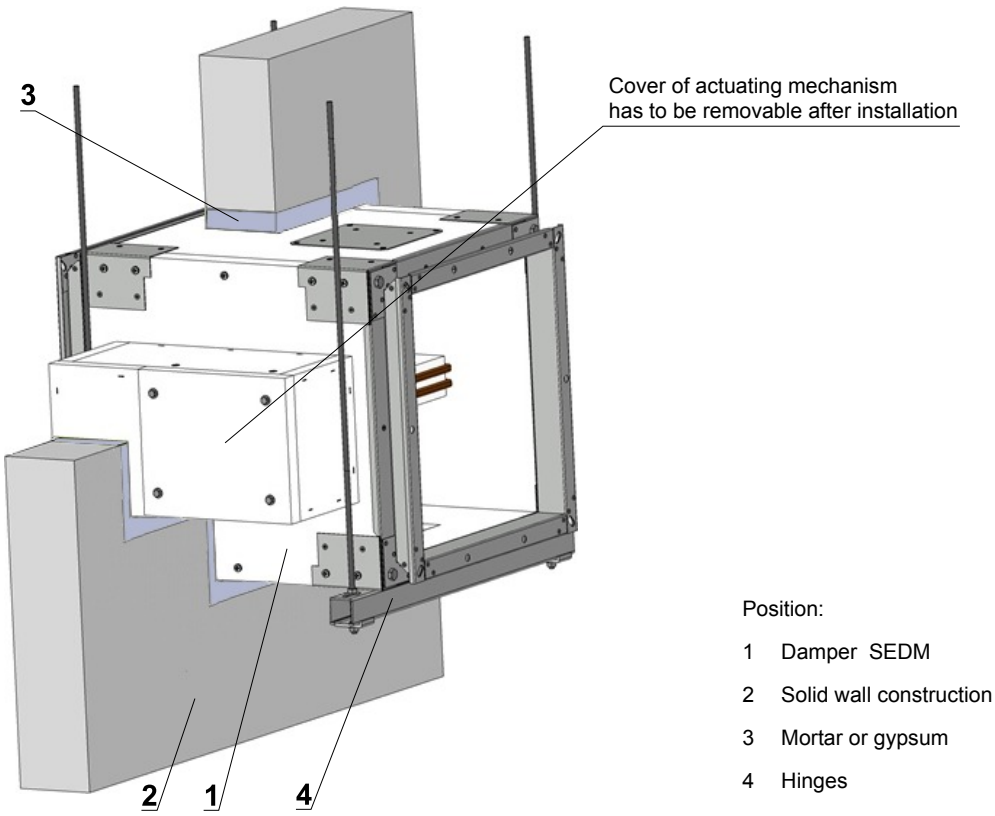

Fig. 21 Example of installation in solid wall construction of fire compartment - vertical blade axis position.

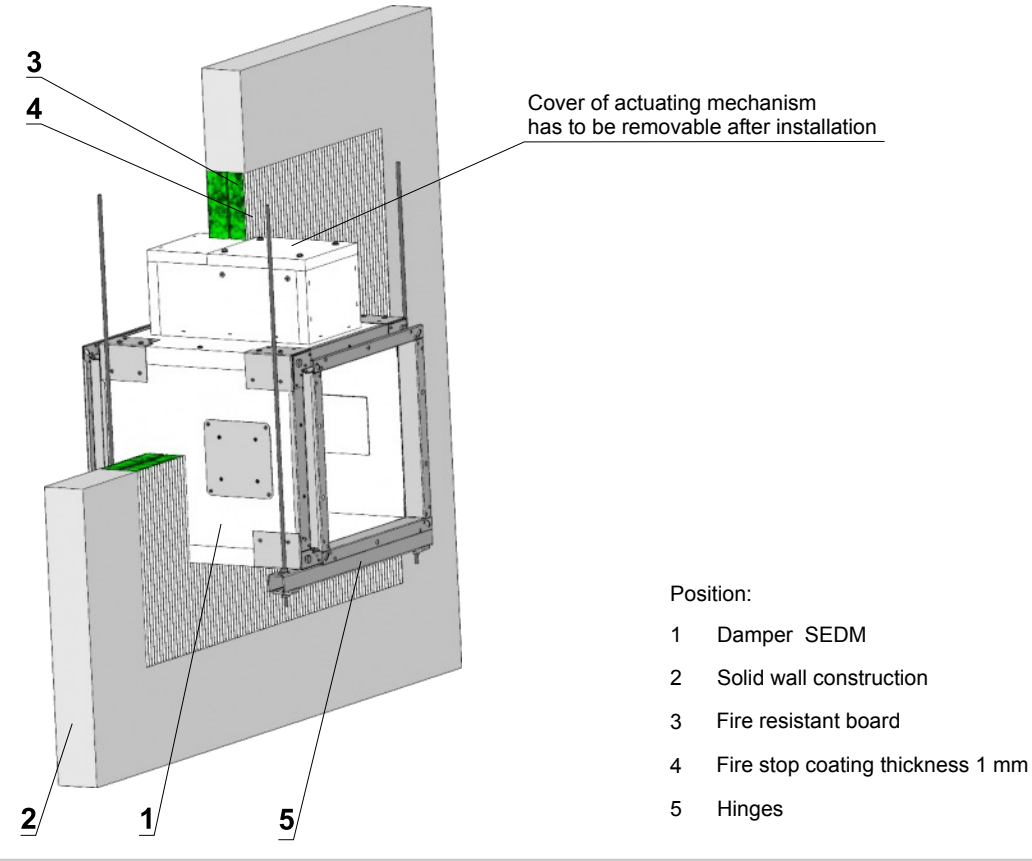

Fig. 22 Example of installation in solid wall construction of fire compartment - horizontal blade axis position.

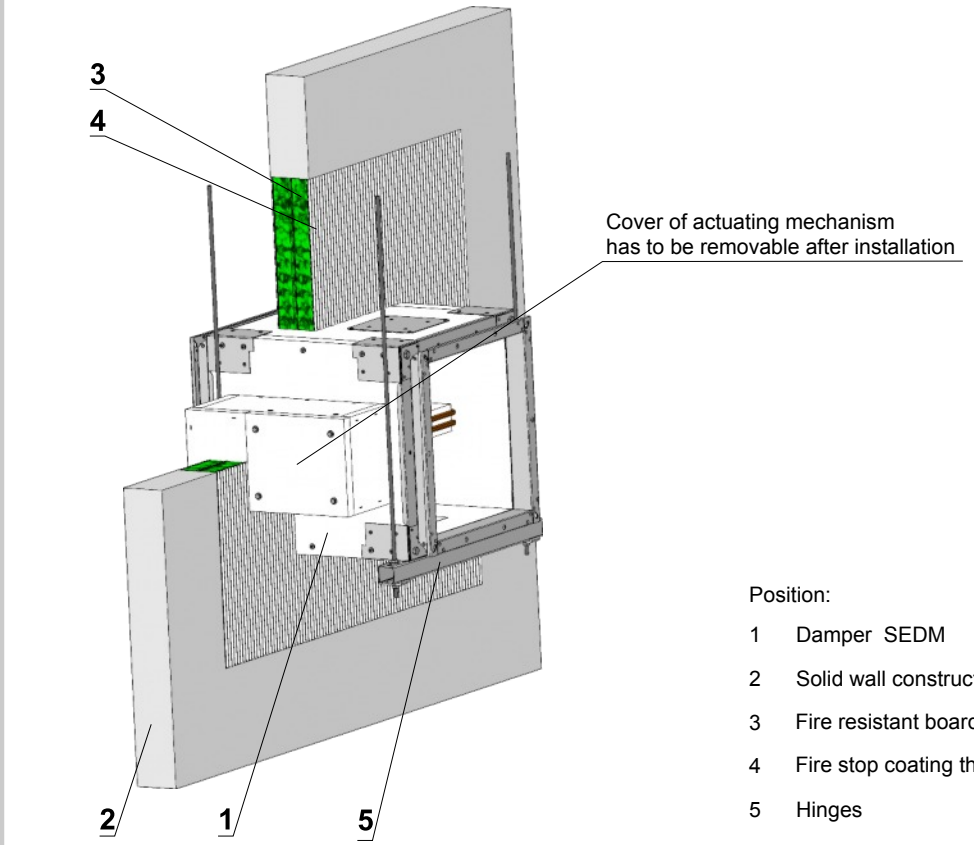

Position:

1 Damper SEDM

2 Solid wall construction

3 Fire resistant board

4 Fire stop coating thickness 1 mm

5 Hinges

Fig. 23 Example of installation in solid ceiling construction of fire compartment - actuating mechanism bellow

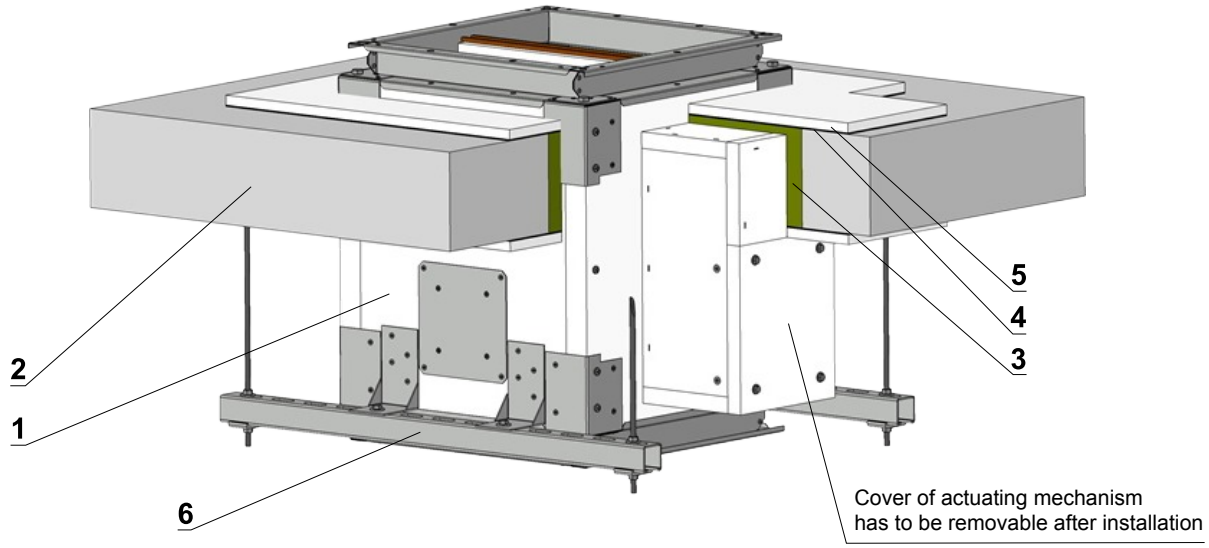

Position:

1 Damper SEDM

2 Solid ceiling construction

3 Mineral stone wool, density 140 kg/m³

4 Fire protection mastic, thickness 1 mm

5 Cement lime plate, thickness 15 mm, density 870 kg/m³

6 Hinges

Number of holders X = (2xZA) + (2xZB)

Dimension A	Number ZA	Dimension B	Number ZB
A ≤ 560	1	B ≤ 560	1
560 < A ≤ 900	2	560 < B ≤ 800	2
900 < A ≤ 1250	3	800 < B ≤ 1000	3
1250 < A ≤ 1600	4		

Fig. 24 Example of installation in solid ceiling construction of fire compartment - actuating mechanism above

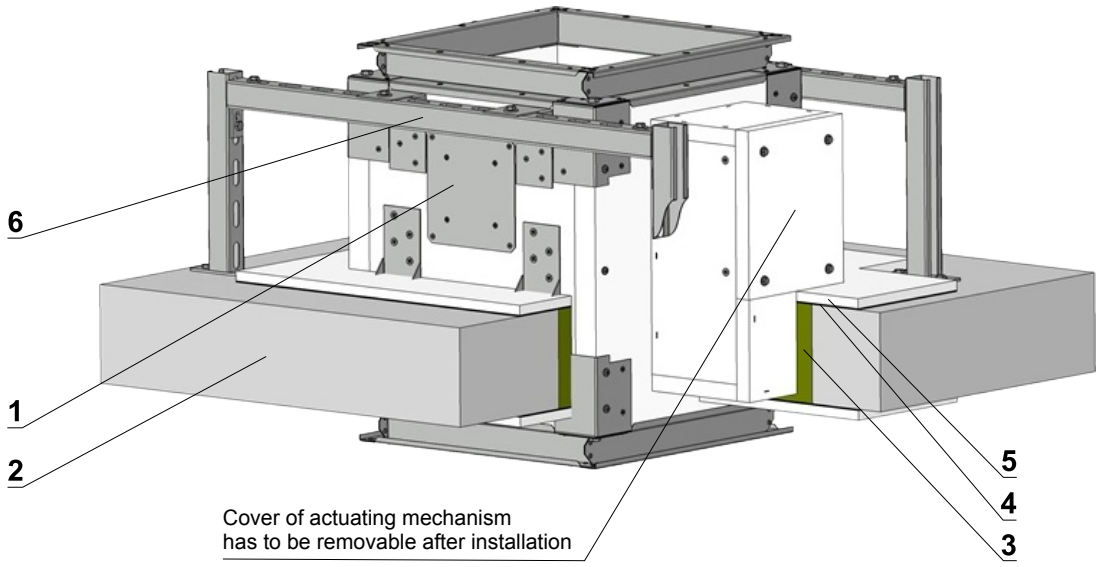

Number of holders X = 2*((2xZA) + (2xZB))

Dimension A	Number ZA	Dimension B	Number ZB
A ≤ 560	1	B ≤ 560	1
560 < A ≤ 900	2	560 < B ≤ 800	2
900 < A ≤ 1250	3	800 < B ≤ 1000	3
1250 < A ≤ 1600	4		

Position:

1 Damper SEDM
2 Solid ceiling construction
3 Mineral stone wool, density 140 kg/m³
4 Fire protection mastic, thickness 1 mm
5 Cement lime plate, thickness 15 mm, density 870 kg/m³
6 Hinges

Fig. 25 Example of installation in solid ceiling construction of fire compartment - actuating mechanism bellow

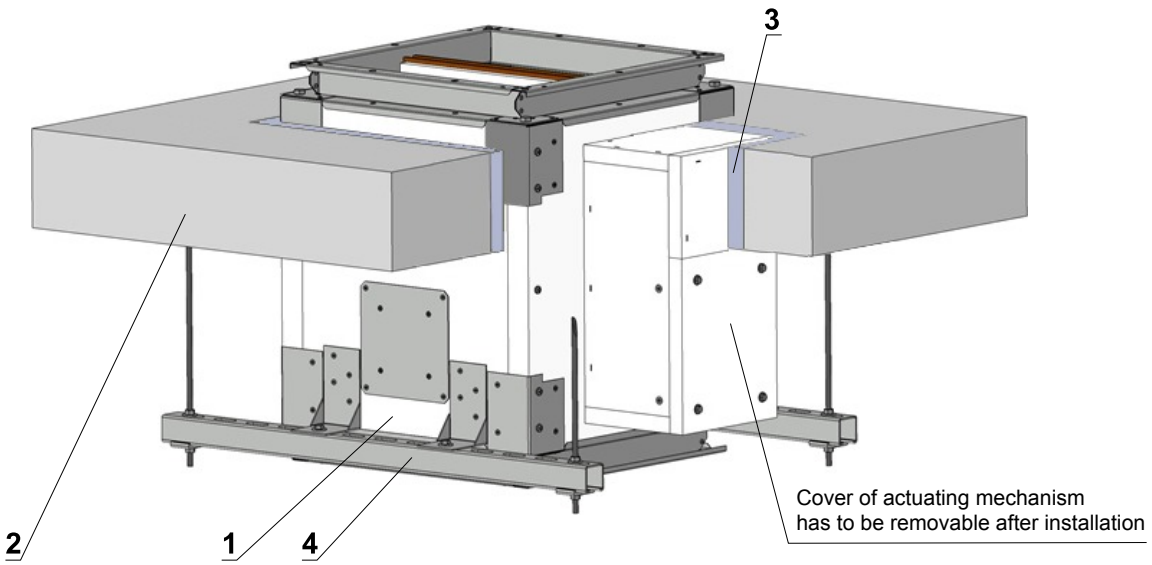

Number of holders X = (2xZA) + (2xZB)

Dimension A	Number ZA	Dimension B	Number ZB
A ≤ 560	1	B ≤ 560	1
560 < A ≤ 900	2	560 < B ≤ 800	2
900 < A ≤ 1250	3	800 < B ≤ 1000	3
1250 < A ≤ 1600	4		

Position:

1 Damper SEDM
2 Solid ceiling construction
3 Mortar or gypsum
4 Hinges

Fig. 26 Example of installation in solid ceiling construction of fire compartment - actuating mechanism above

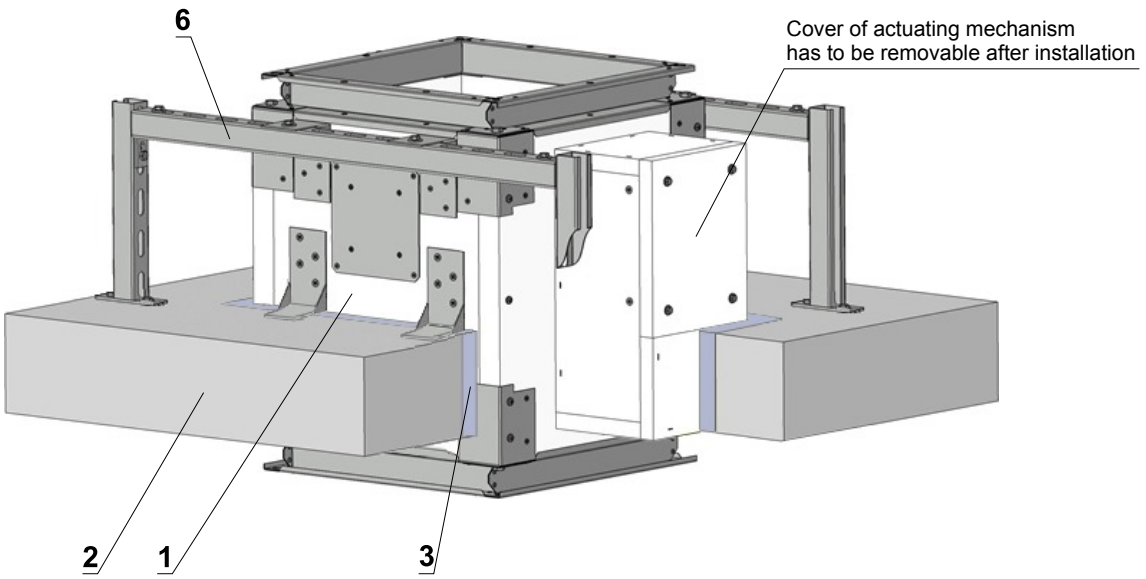

Number of holders X = 2*((2xZA) + (2xZB))

Dimension A	Number ZA	Dimension B	Number ZB
A ≤ 560	1	B ≤ 560	1
560 < A ≤ 900	2	560 < B ≤ 800	2
900 < A ≤ 1250	3	800 < B ≤ 1000	3
1250 < A ≤ 1600	4		

Position:

1 Damper SEDM

2 Solid ceiling construction

3 Mortar or gypsum

4 Hinges

Fig. 27 Example of installation in solid ceiling construction of fire compartment - actuating mechanism bellow

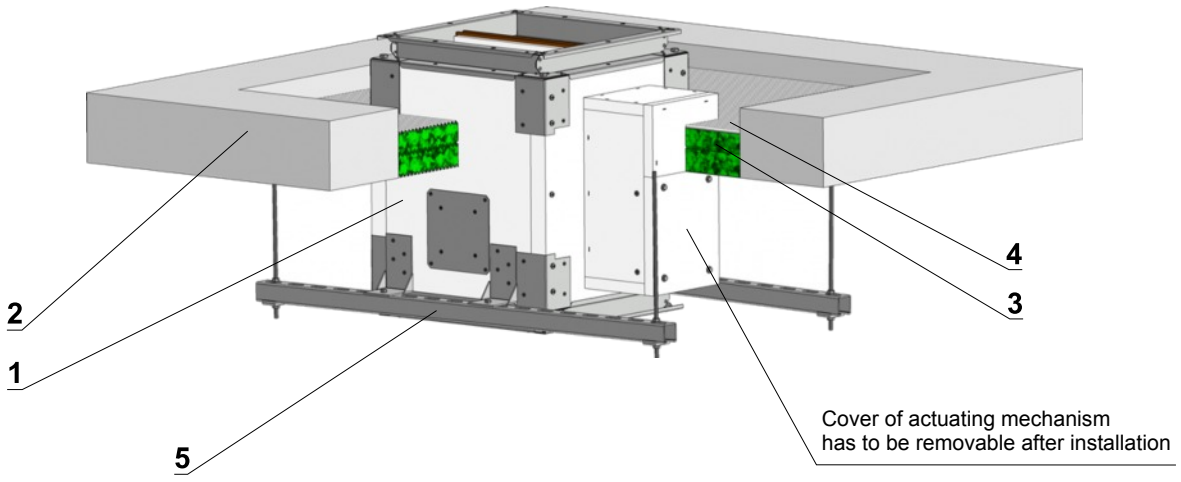

Number of holders X = (2xZA) + (2xZB)

Dimension A	Number ZA	Dimension B	Number ZB
A ≤ 560	1	B ≤ 560	1
560 < A ≤ 900	2	560 < B ≤ 800	2
900 < A ≤ 1250	3	800 < B ≤ 1000	3
1250 < A ≤ 1600	4		

Position:

1 Damper SEDM

2 Solid ceiling construction

3 Fire resistant board

4 Fire stop coating thickness 1 mm

5 Hinges

Fig. 28 Example of installation in solid ceiling construction of fire compartment - actuating mechanism above

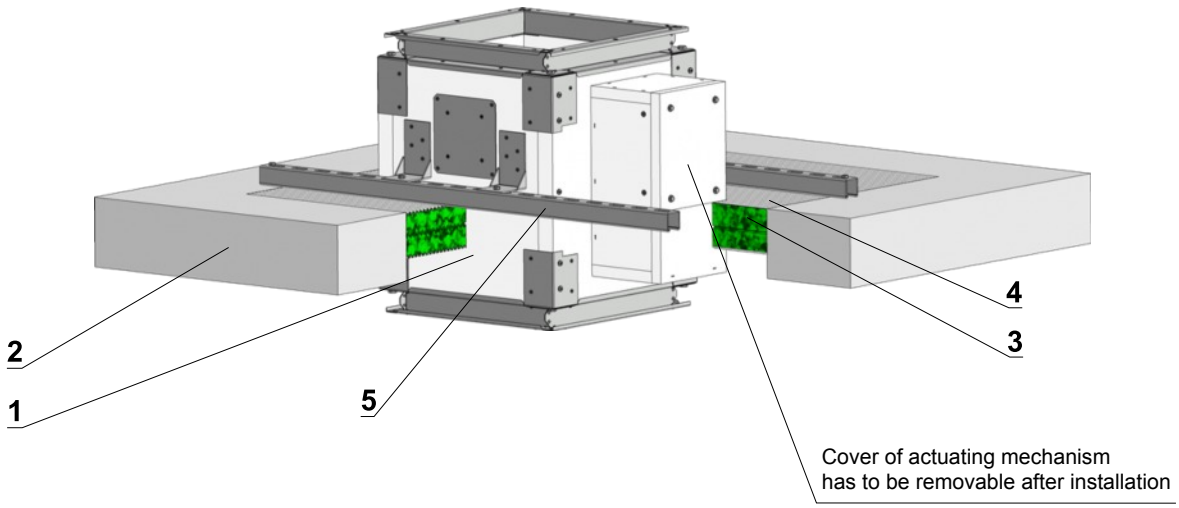

Number of holders X = (2xZA) + (2xZB)

Dimension A	Number ZA	Dimension B	Number ZB
A ≤ 560	1	B ≤ 560	1
560 < A ≤ 900	2	560 < B ≤ 800	2
900 < A ≤ 1250	3	800 < B ≤ 1000	3
1250 < A ≤ 1600	4		

Position:

1 Damper SEDM

2 Solid ceiling construction

3 Fire resistant board

4 Fire stop coating thickness 1 mm

5 Hinges

5.4.2. Installation in gypsum wall construction of fire compartment

Fig. 29 Example of installation in gypsum wall construction of fire compartment.

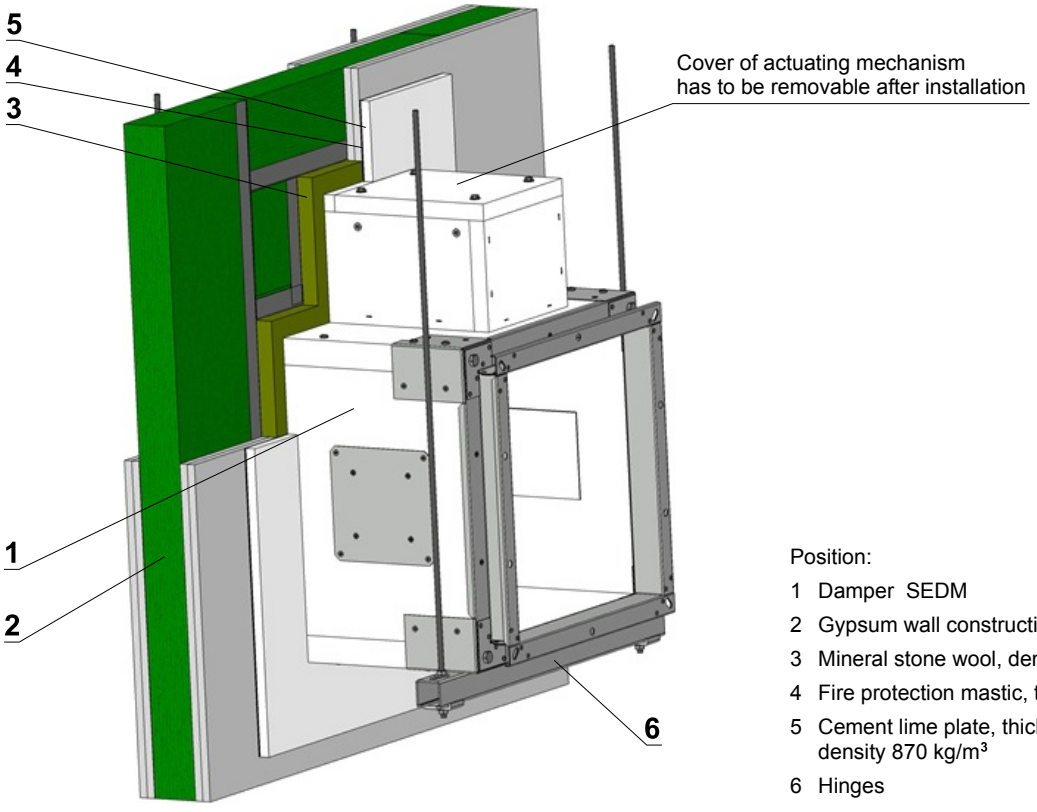

Position:

1 Damper SEDM

2 Gypsum wall construction

3 Mineral stone wool, density 140 kg/m^3

4 Fire protection mastic, thickness 1 mm

5 Cement lime plate, thickness 15 mm, density 870 kg/m^3

6 Hinges

Fig. 30 Example of installation in gypsum wall construction of fire compartment.

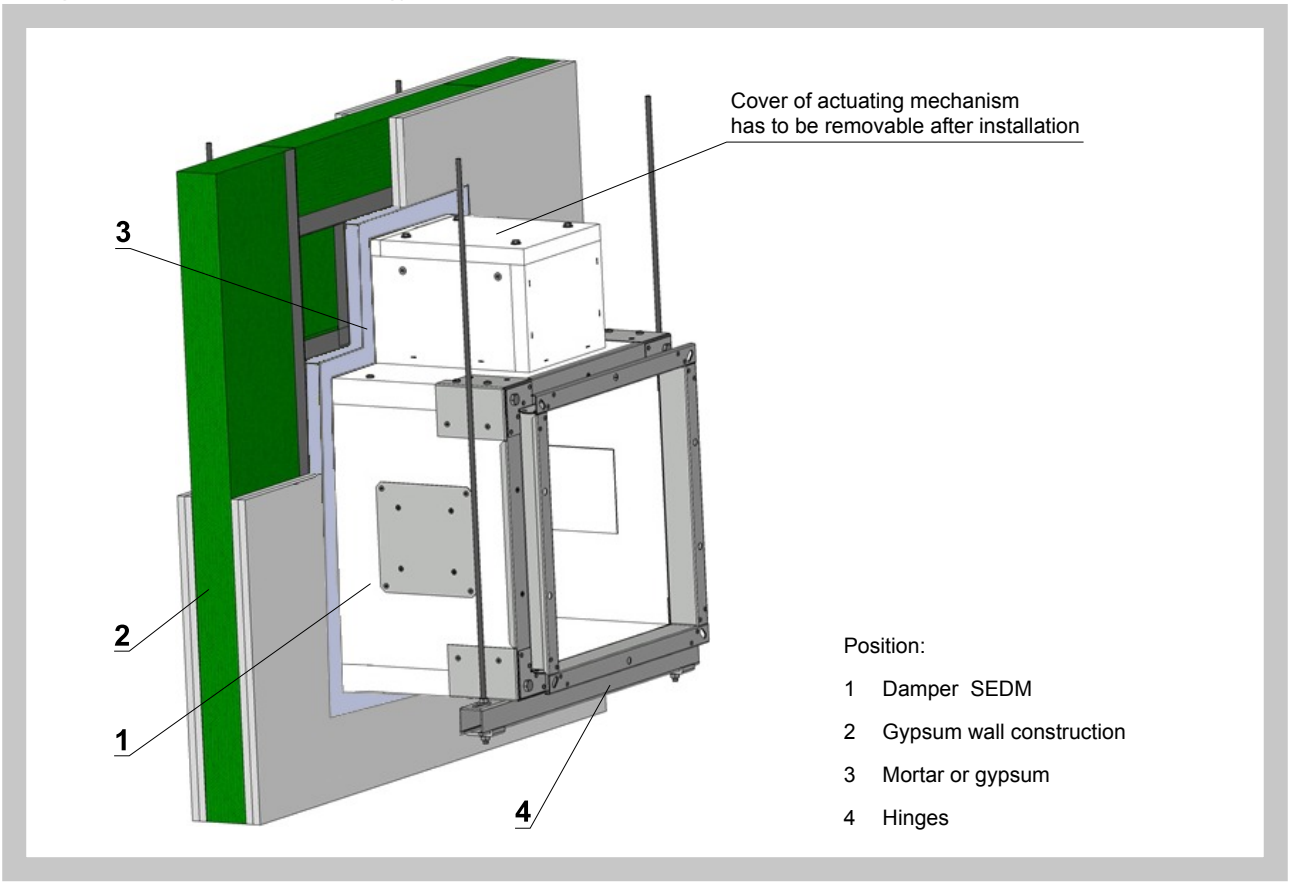

Fig. 31 Example of installation in gypsum wall construction of fire compartment - vertical blade axis position.

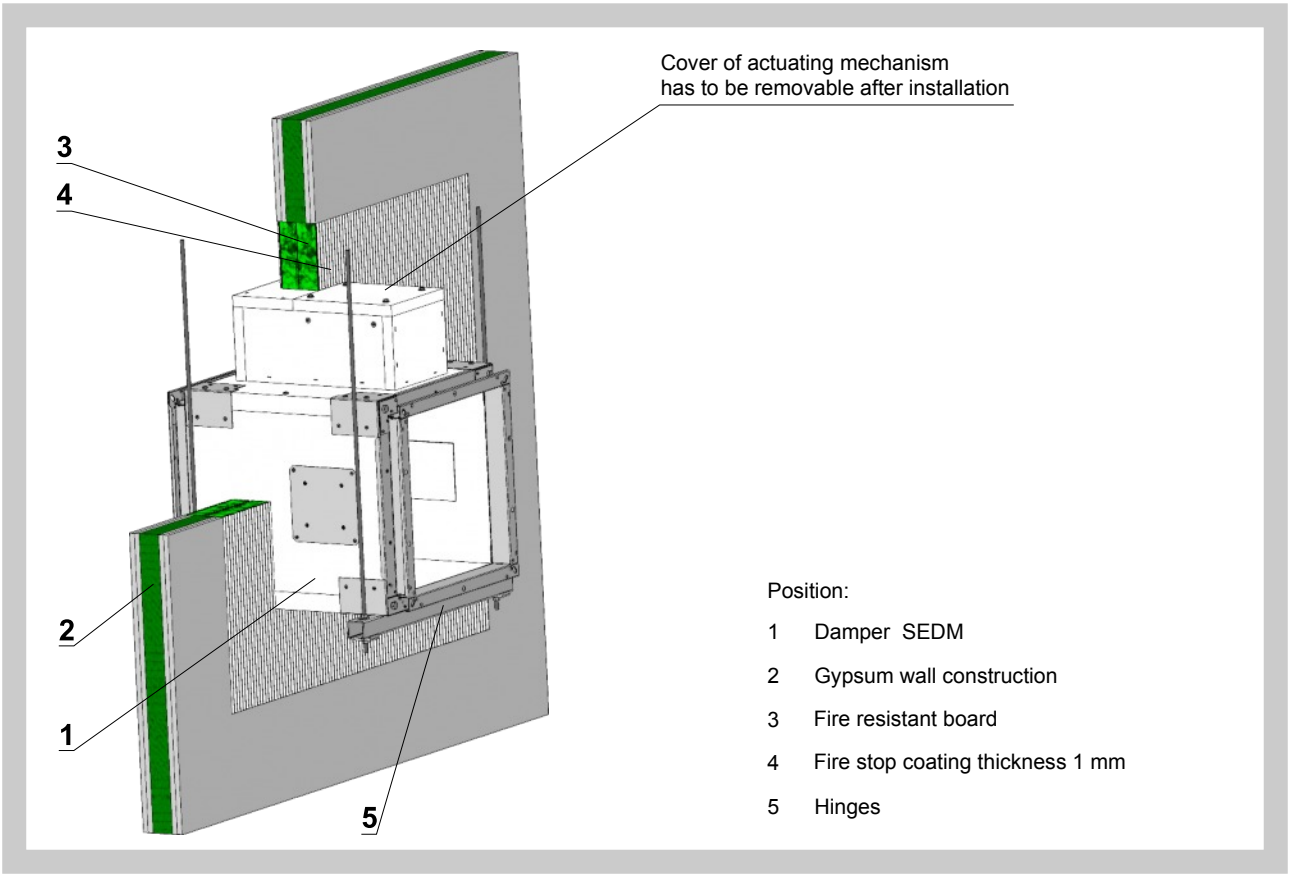

Fig. 32 Example of installation in gypsum wall construction of fire compartment - horizontal blade axis position.

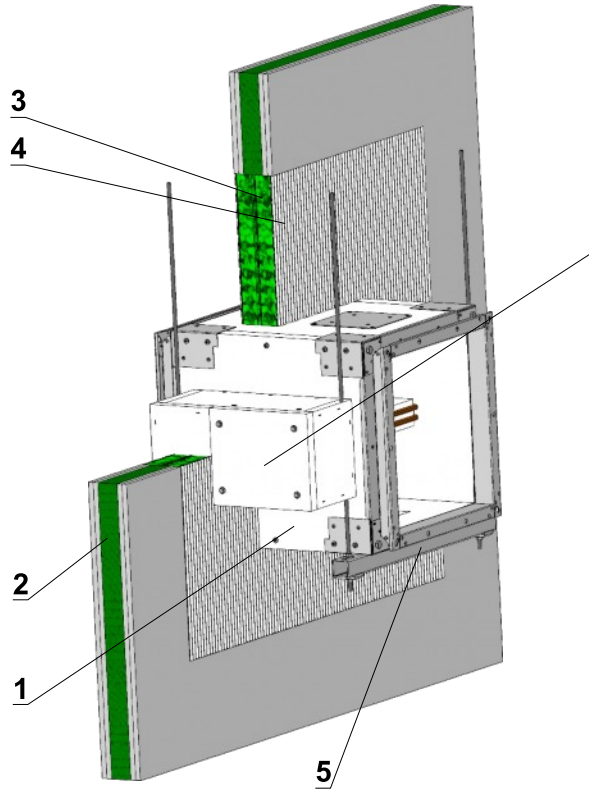

Position:

1 Damper SEDM

2 Gypsum wall construction

3 Fire resistant board

4 Fire stop coating thickness 1 mm

5 Hinges

5.4.3. Installation on solid wall or ceiling construction of fire compartment

Fig. 33 Example of installation on solid wall construction of fire compartment. - vertical blade axis position.

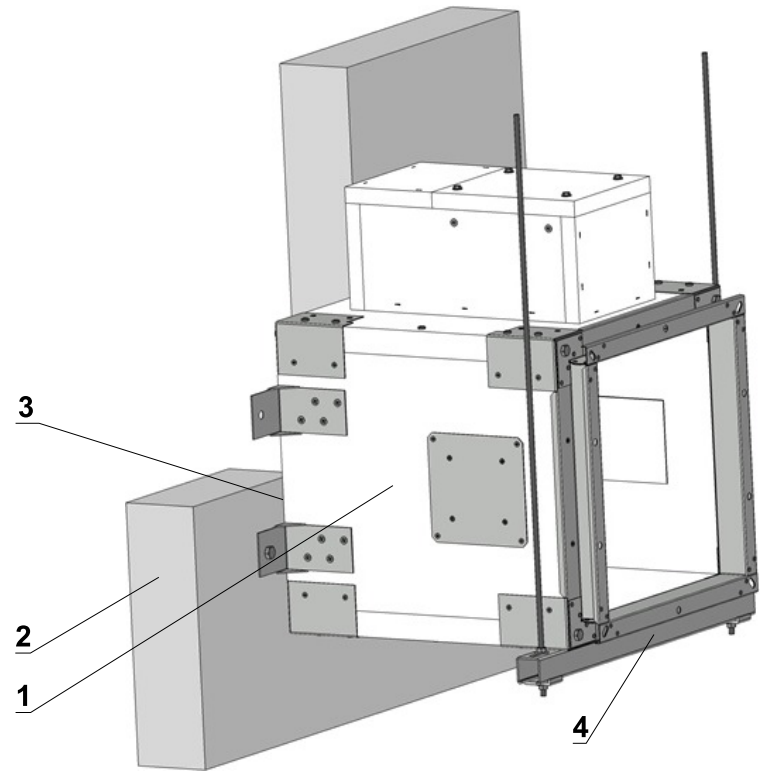

Number of holders X = (2xZA) + (2xZB)

Dimension A	Number ZA	Dimension B	Number ZB
A ≤ 560	1	B ≤ 560	1
560 < A ≤ 900	2	560 < B ≤ 800	2
900 < A ≤ 1250	3	800 < B ≤ 1000	3
1250 < A ≤ 1600	4		

Position:

1 Damper SEDM

2 Solid wall construction

3 Ceramic paper*

4 Hinges

* Ceramic paper is placed between damper and solid wall construction

Fig. 34 Example of installation on solid wall construction of fire compartment - horizontal blade axis position.

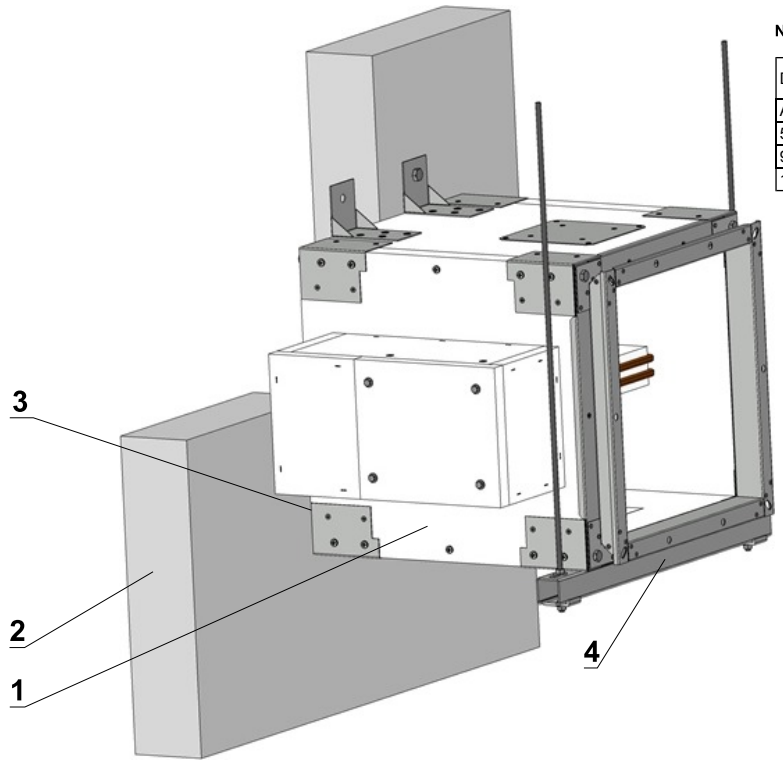

Number of holders X = (2xZA) + (2xZB)

Dimension A	Number ZA	Dimension B	Number ZB
A ≤ 560	1	B ≤ 560	1
560 < A ≤ 900	2	560 < B ≤ 800	2
900 < A ≤ 1250	3	800 < B ≤ 1000	3
1250 < A ≤ 1600	4		

Position:

1 Damper SEDM

2 Solid wall construction

3 Ceramic paper*

4 Hinges

* Ceramic paper is placed between damper and solid wall construction

Fig. 35 Example of installation on solid ceiling construction of fire compartment - suspension.

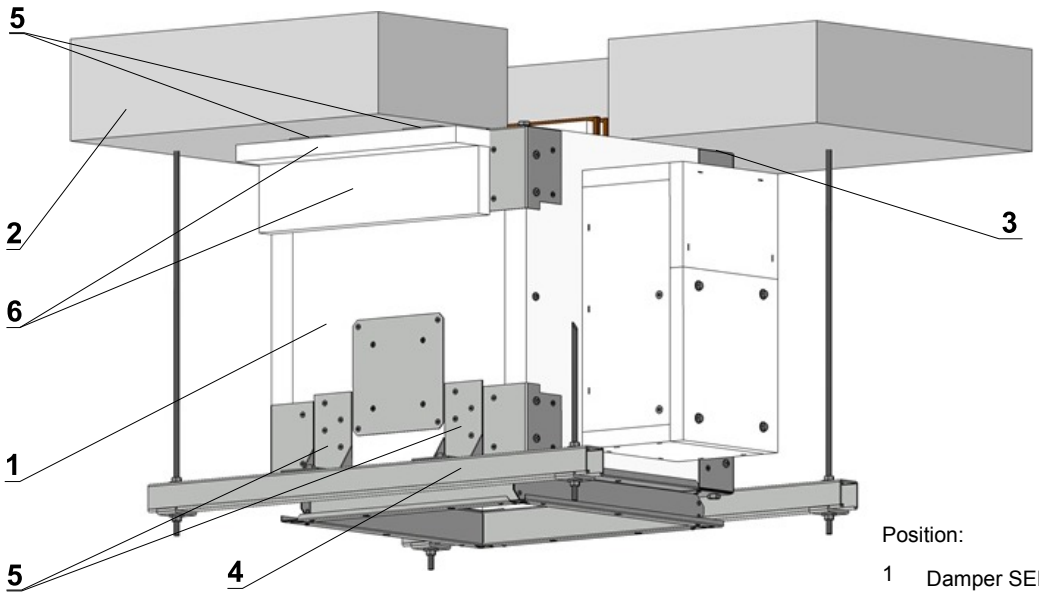

Number of holders X = 2*((2xZA) + (2xZB))

Dimension A	Number ZA	Dimension B	Number ZB
A ≤ 560	1	B ≤ 560	1
560 < A ≤ 900	2	560 < B ≤ 800	2
900 < A ≤ 1250	3	800 < B ≤ 1000	3
1250 < A ≤ 1600	4		

* Ceramic paper is placed between damper and solid wall construction

Position:

1 Damper SEDM

2 Solid ceiling construction

3 Ceramic paper*

4 Hinges

5 Holder L

6 Cement lime plate

Fig. 36 Example of installation on solid ceiling construction of fire compartment - above installation.

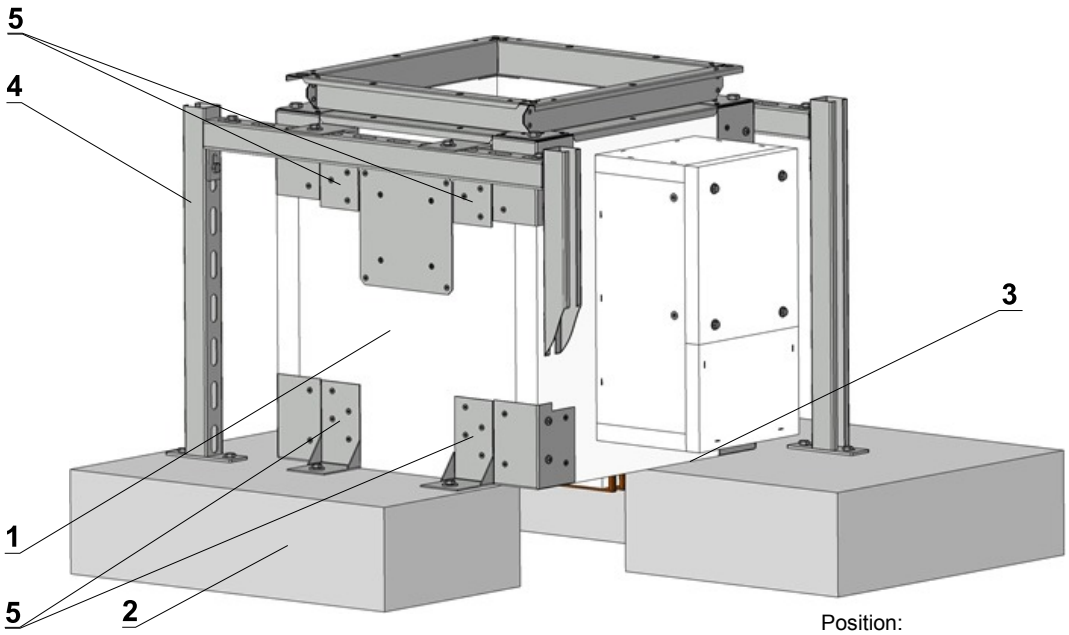

Number of holders X = 2*((2xZA) + (2xZB))

Dimension A	Number ZA	Dimension B	Number ZB
A ≤ 560	1	B ≤ 560	1
560 < A ≤ 900	2	560 < B ≤ 800	2
900 < A ≤ 1250	3	800 < B ≤ 1000	3
1250 < A ≤ 1600	4		

* Ceramic paper is placed between damper and solid wall construction

Position:

1 Damper SEDM

2 Solid ceiling construction

3 Ceramic paper*

4 Hinges

5 Holder L

5.4.4. Installation in smoke exhaust duct.

Fig. 37 Example of installation in vertical smoke exhaust duct.

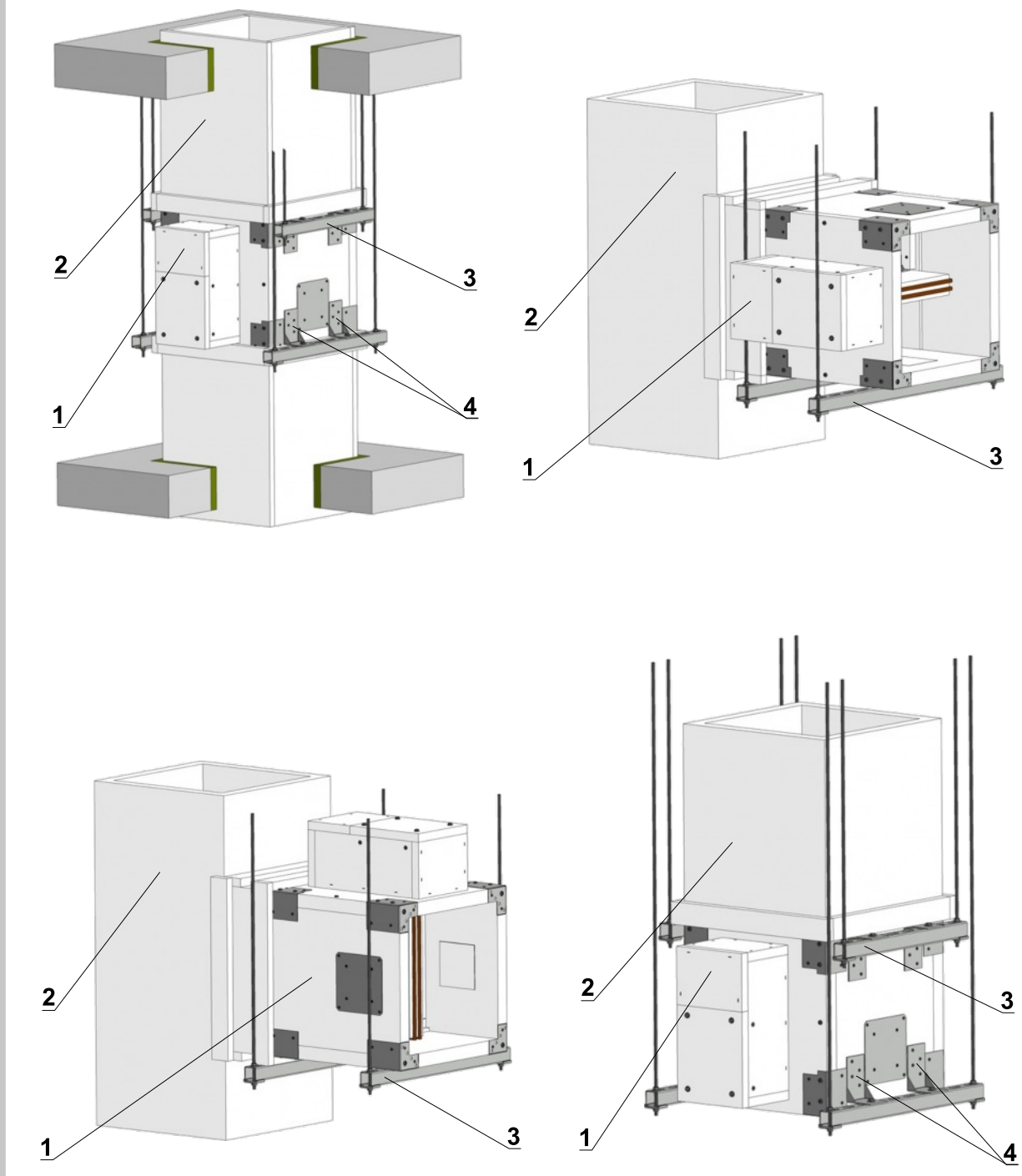

Position:

1 Damper SEDM

2 Duct

3 Hinges

4 Holder L

Number of holders X = 2*((2xZA) + (2xZB))

Dimension A	Number ZA	Dimension B	Number ZB
A ≤ 560	1	B ≤ 560	1
560 < A ≤ 900	2	560 < B ≤ 800	2
900 < A ≤ 1250	3	800 < B ≤ 1000	3
1250 < A ≤ 1600	4		

Fig. 38 **Example of installation in horizontal smoke exhaust duct.**

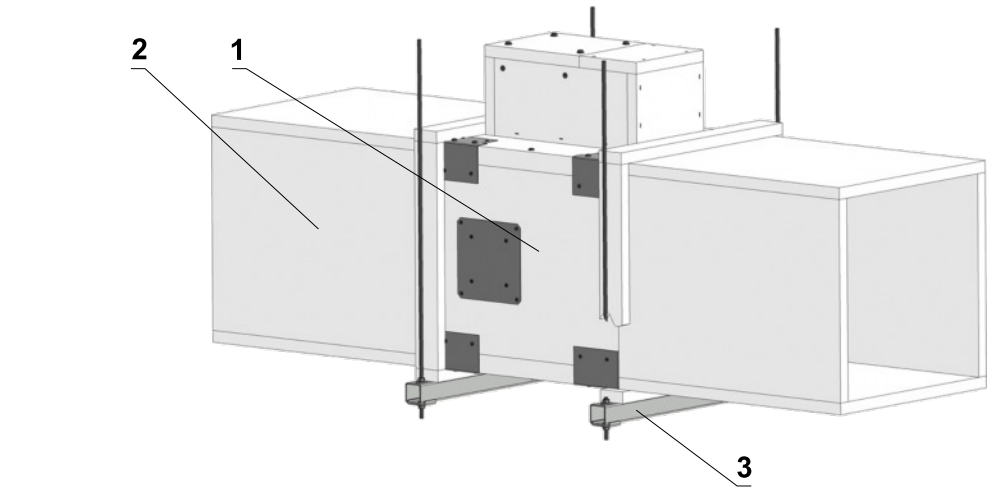

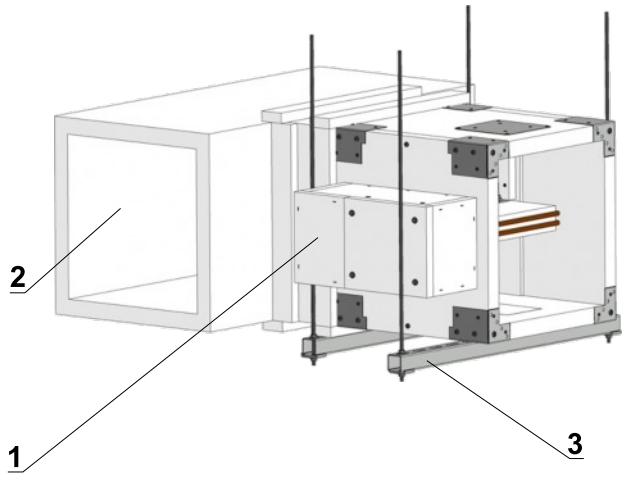

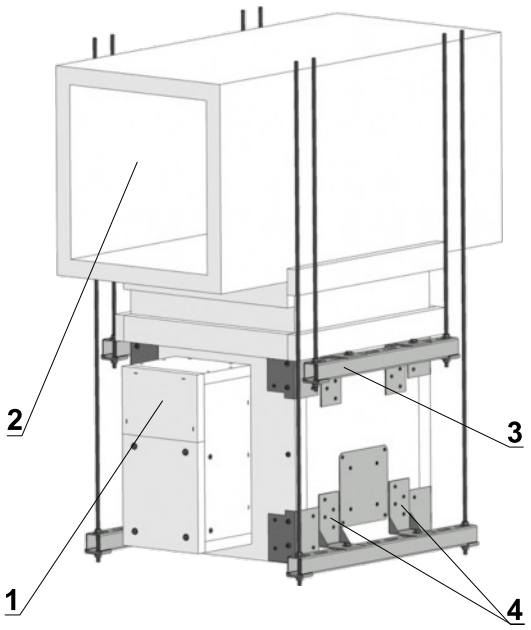

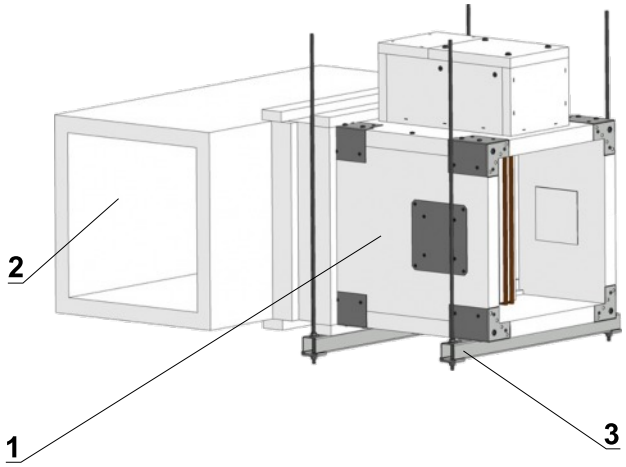

Number of holders X = 2*((2xZA) + (2xZB))

Dimension A	Number ZA	Dimension B	Number ZB
A ≤ 560	1	B ≤ 560	1
560 < A ≤ 900	2	560 < B ≤ 800	2
900 < A ≤ 1250	3	800 < B ≤ 1000	3
1250 < A ≤ 1600	4		

Position:

1 Damper SEDM

2 Duct

3 Hinges

4 Holder L

5.5. Installation in battery

Fig. 39 **2 dampers side by side - solid / gypsum wall construction - mortar or gypsum / weichschott**

EIS 90 - solid wall construction - mortar-gypsum
EIS 120 - solid wall construction - weichschott
EIS 120 - gypsum wall construction - weichschott

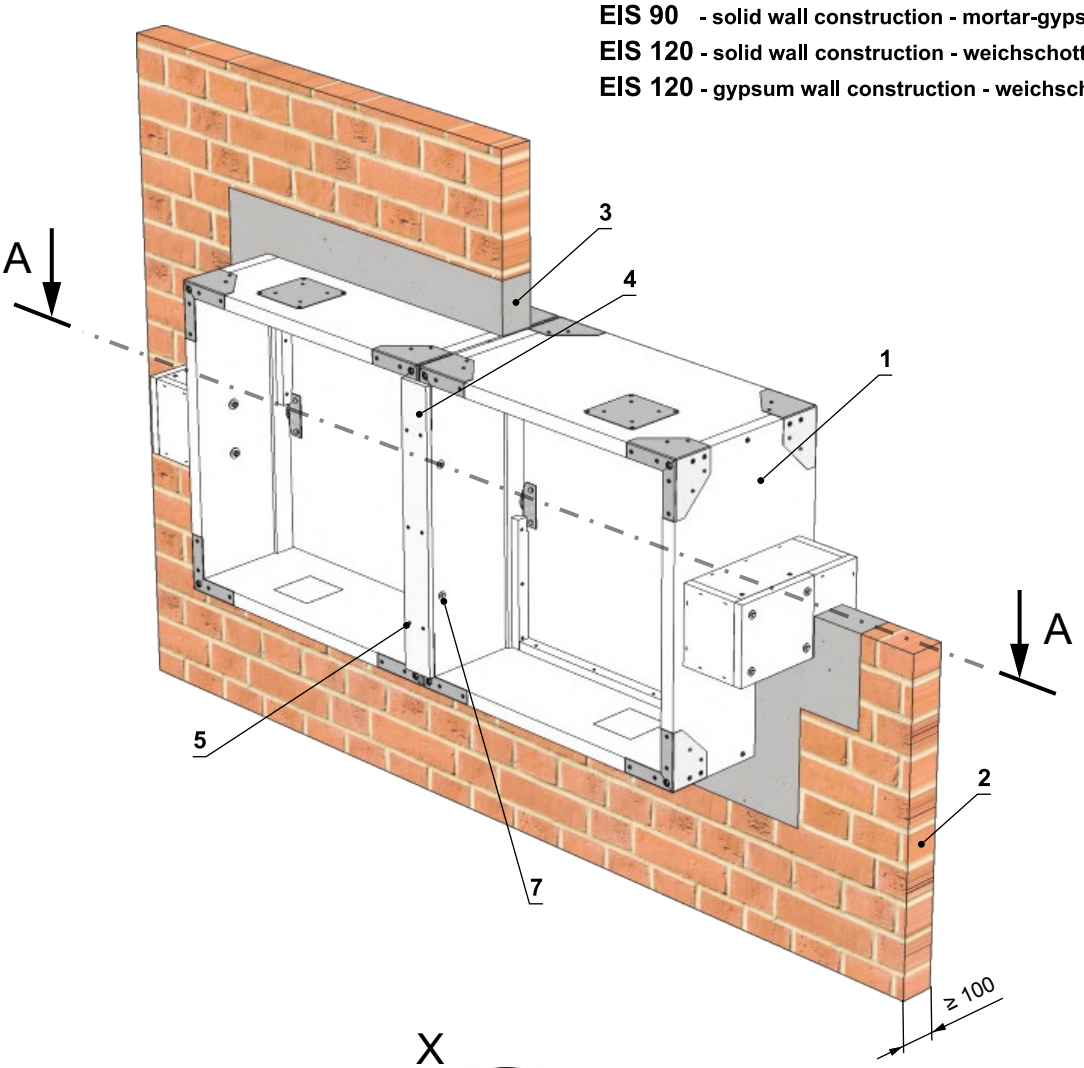

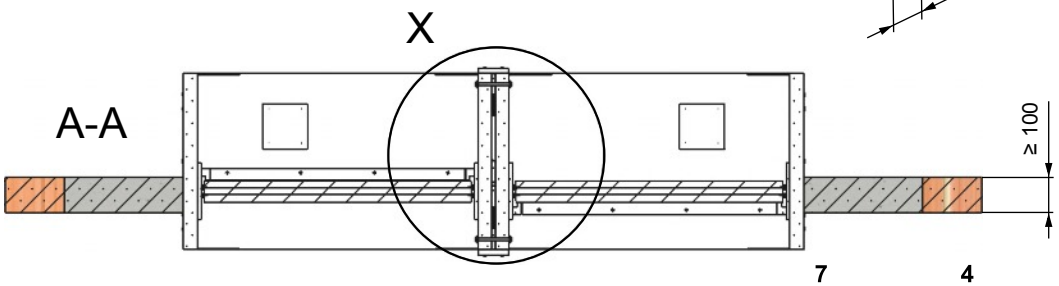

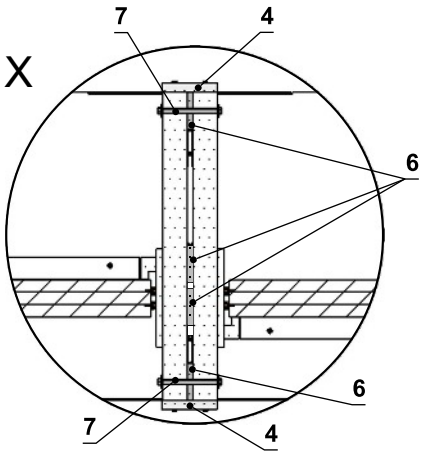

*** RESPECT JOINT POSITION !**
Bolts and nuts shall not prevent free rotation on the blades.

Position:

1 SEDM
2 Solid / gypsum wall construction
3 Mortar or gypsum / weichschott
4 Overplating strip (e.g. Promatect-H, th. 15 mm)
5 Screw 4x40 (span 200 to 250 mm)
6 Spacing strip (e.g. Promatect-H, th. 10 mm, width 40 to 50 mm)
7 M8 bolt assemply (bolt, 2 pcs large washer, nut) *

Connecting straps, spacer straps, screws and screw connections are not included in the delivery!

Fig. 40 2 dampers on top of each other - solid / gypsum wall construction - mortar or gypsum / weichschott

EIS 90 - solid wall construction - mortar-gypsum
EIS 120 - solid wall construction - weichschott
EIS 120 - gypsum wall construction - weichschott

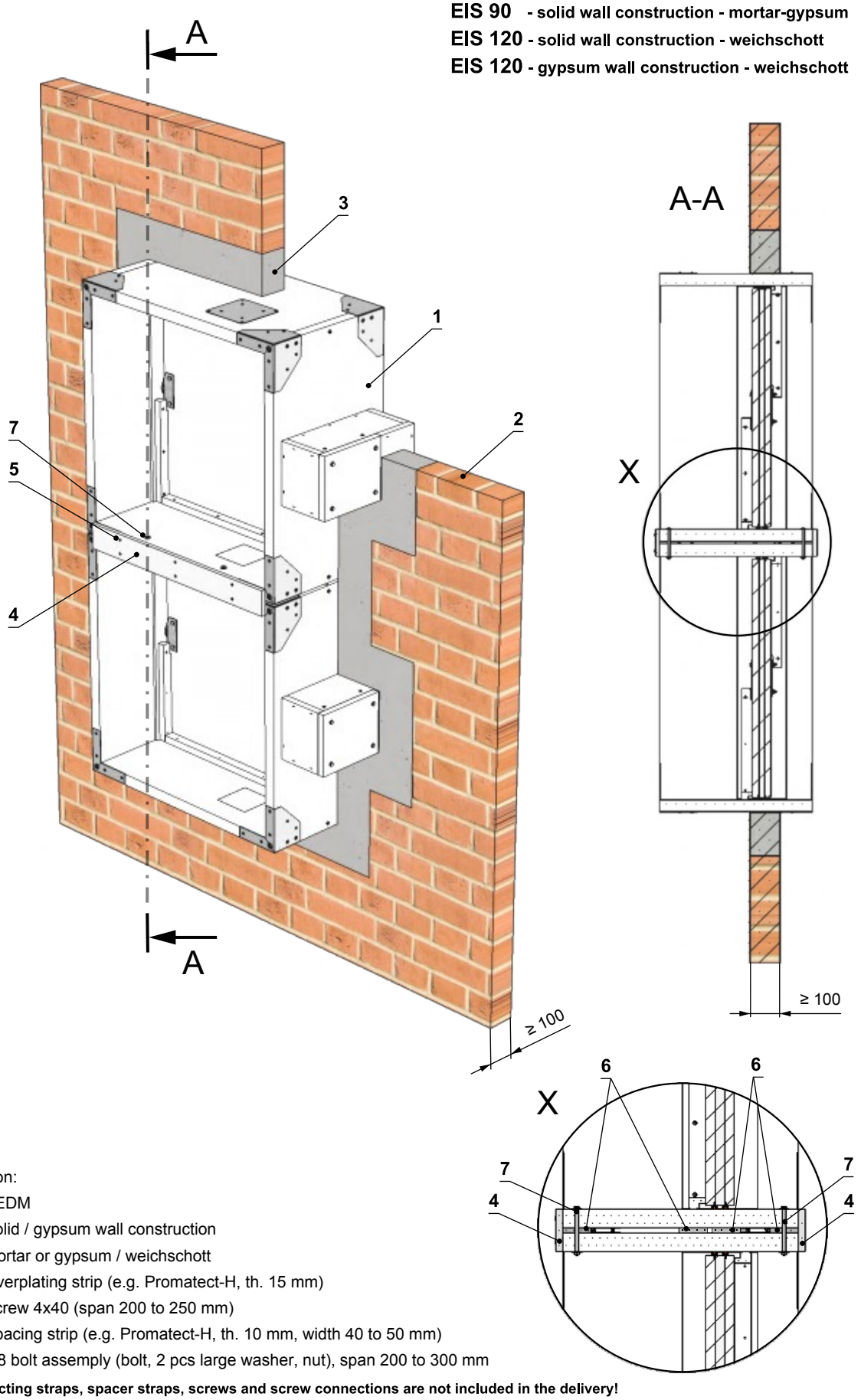

Position:

1 SEDM
2 Solid / gypsum wall construction
3 Mortar or gypsum / weichschott
4 Overplating strip (e.g. Promatect-H, th. 15 mm)
5 Screw 4x40 (span 200 to 250 mm)
6 Spacing strip (e.g. Promatect-H, th. 10 mm, width 40 to 50 mm)
7 M8 bolt assemply (bolt, 2 pcs large washer, nut), span 200 to 300 mm

Connecting straps, spacer straps, screws and screw connections are not included in the delivery!

Fig. 41 **4 dampers - solid / gypsum wall construction - mortar or gypsum / weichschott**

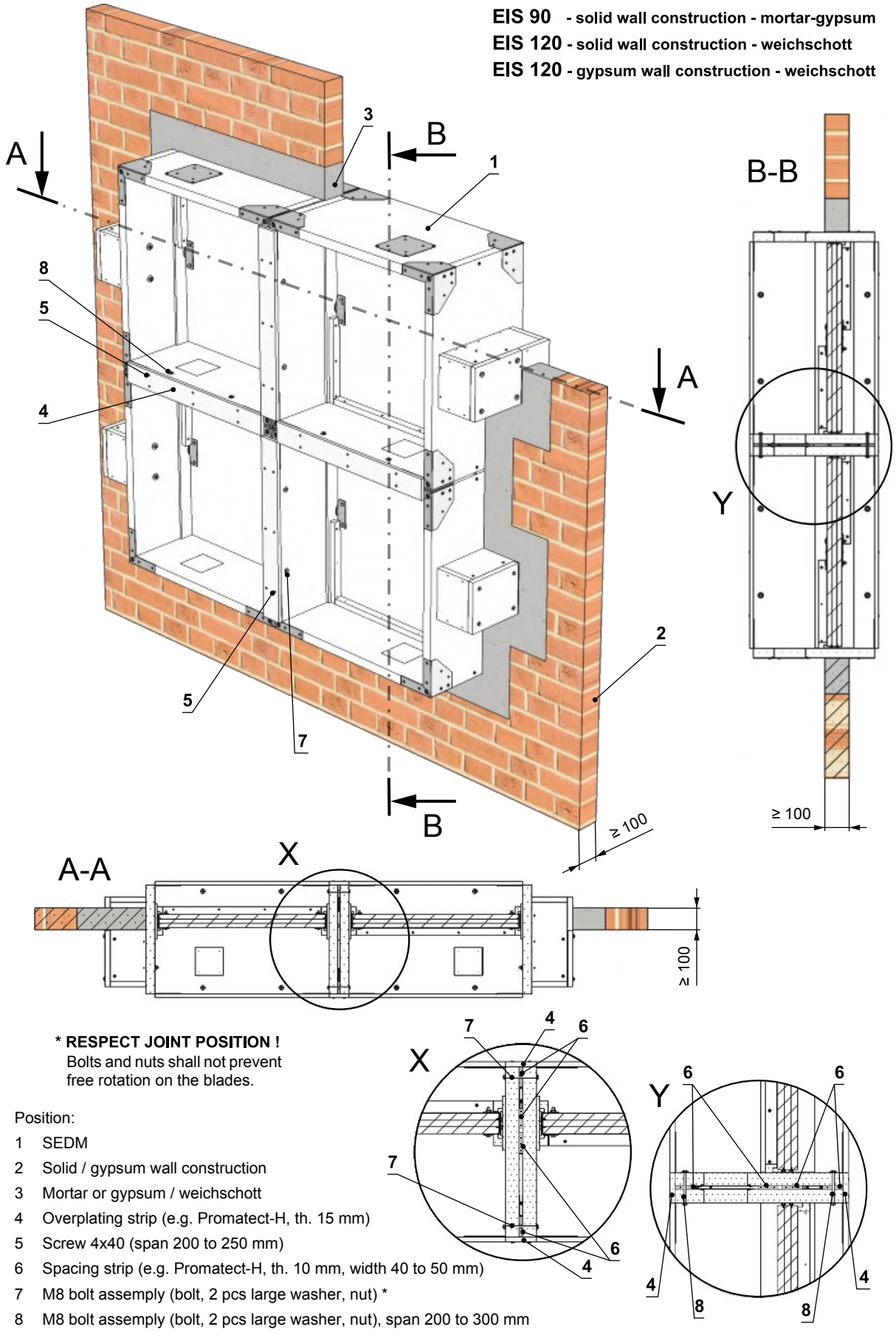

*** RESPECT JOINT POSITION !**
Bolts and nuts shall not prevent free rotation on the blades.

Position:

1 SEDM
2 Solid / gypsum wall construction
3 Mortar or gypsum / weichschott
4 Overplating strip (e.g. Promatect-H, th. 15 mm)
5 Screw 4x40 (span 200 to 250 mm)
6 Spacing strip (e.g. Promatect-H, th. 10 mm, width 40 to 50 mm)
7 M8 bolt assemply (bolt, 2 pcs large washer, nut) *
8 M8 bolt assemply (bolt, 2 pcs large washer, nut), span 200 to 300 mm

Connecting straps, spacer straps, screws and screw connections are not included in the delivery!

Fig. 42 3 dampers on top of each other - solid / gypsum wall construction - mortar or gypsum / weichschott

EIS 90 - solid wall construction - mortar-gypsum
EIS 120 - solid wall construction - weichschott
EIS 120 - gypsum wall construction - weichschott

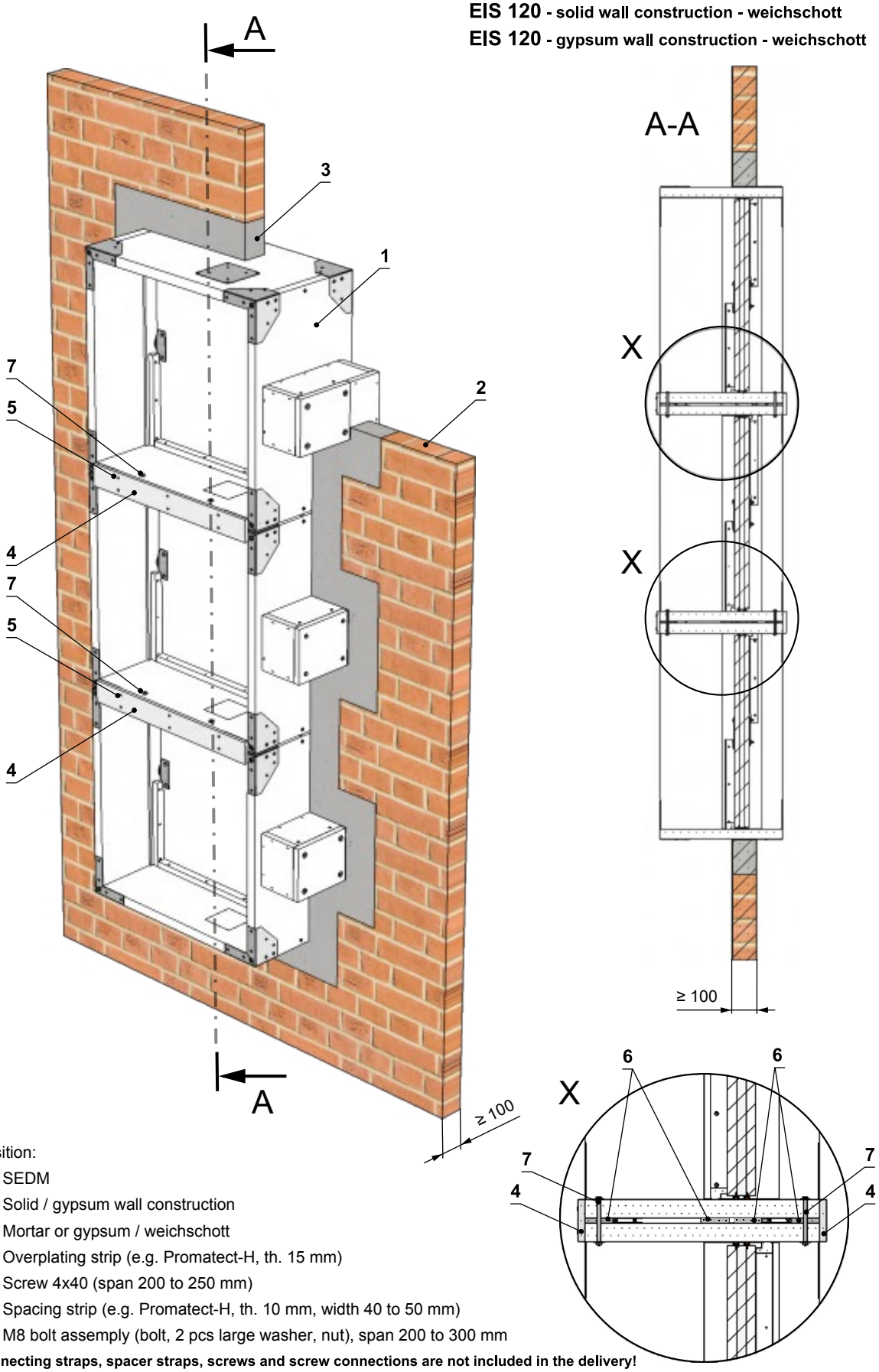

Position:

1 SEDM
2 Solid / gypsum wall construction
3 Mortar or gypsum / weichschott
4 Overplating strip (e.g. Promatect-H, th. 15 mm)
5 Screw 4x40 (span 200 to 250 mm)
6 Spacing strip (e.g. Promatect-H, th. 10 mm, width 40 to 50 mm)
7 M8 bolt assemply (bolt, 2 pcs large washer, nut), span 200 to 300 mm

Connecting straps, spacer straps, screws and screw connections are not included in the delivery!

6. Damper suspension and connection to the duct

6.1. Dampers can be suspended by using of threaded rods and fixing rails. Threaded rods has to be designed depend on damper weight.

6.2. Damper suspension has to be solve separately. Back-to-back smoke exhaust duct has to be hung or supported so as all load transfer from the back-to-back smoke exhaust duct to the damper is absolutely excluded. Exhaust duct suspension has to be made according to recommendation of exhaust duct supplier.

6.3. Threaded rods longer than 1,5 m has to be protected by fire resistant insulation.

6.4. For fixing suspension system to solid ceiling has to be used only steel anchors with appropriate fire resistance or other suitable system.

Tab. 6.1. Recommended load value of threaded rods G [kg] - fire resistance 90 minutes

Size	A_s [mm²]	Weight G [kg]	
		One rod	Pair of rods
M8	36,6	22	44
M10	58,0	35	70
M12	84,3	52	104
M14	115	70	140
M16	157	96	192
M18	192	117	234
M20	245	150	300

Fig. 43 Examples of fixing suspension system to solid ceiling

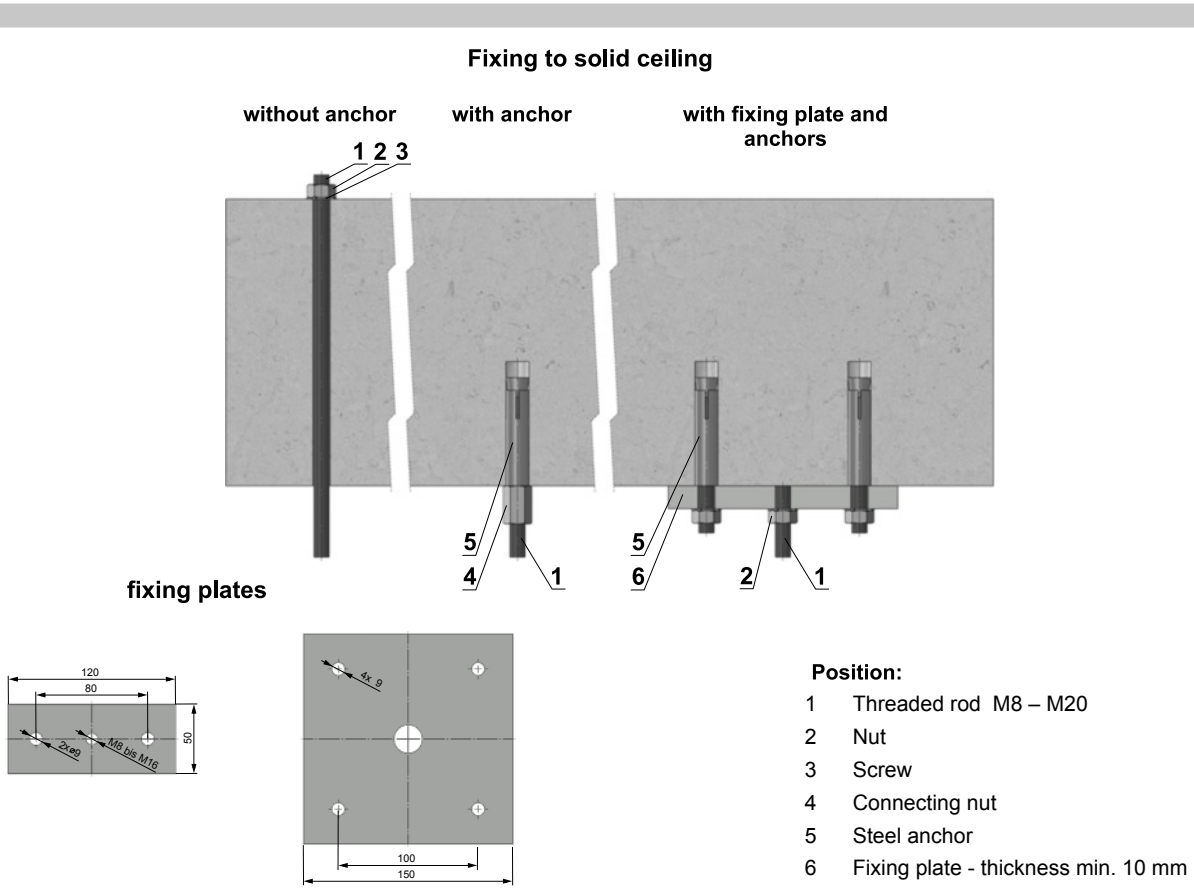

6.5. Examples of hinges fixing

Fig. 44 Examples of hinges fixing

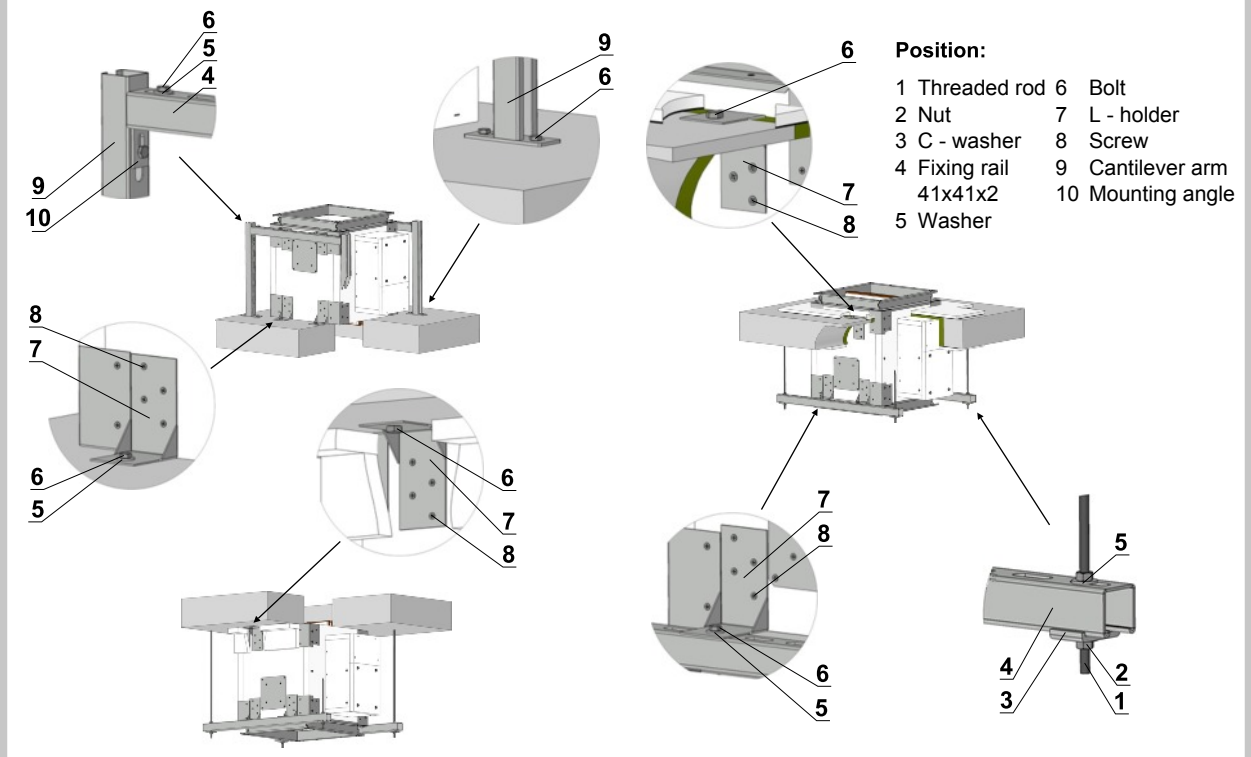

6.6. Connection to the exhaust duct to be made according to recommendation of exhaust duct supplier.

Fig. 45 Examples of damper connection to the duct

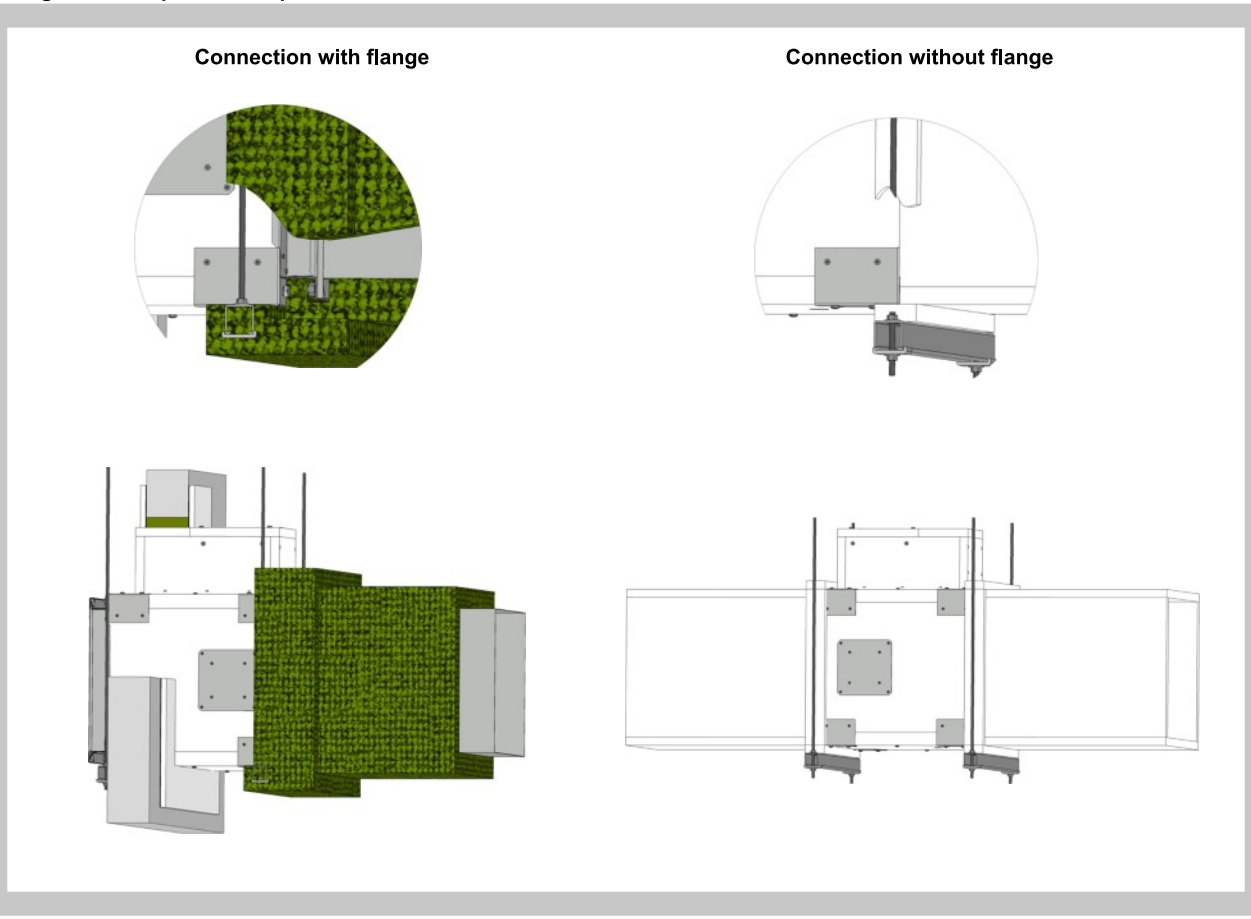

III. ACCESSORIES

7. Cover grille

- The grilles type KMM can be used to close smoke control dampers.
- These grilles are available in all sizes of the smoke control dampers.

Abb. 46 Cover grille KMM

SEDM with cover grille without flange

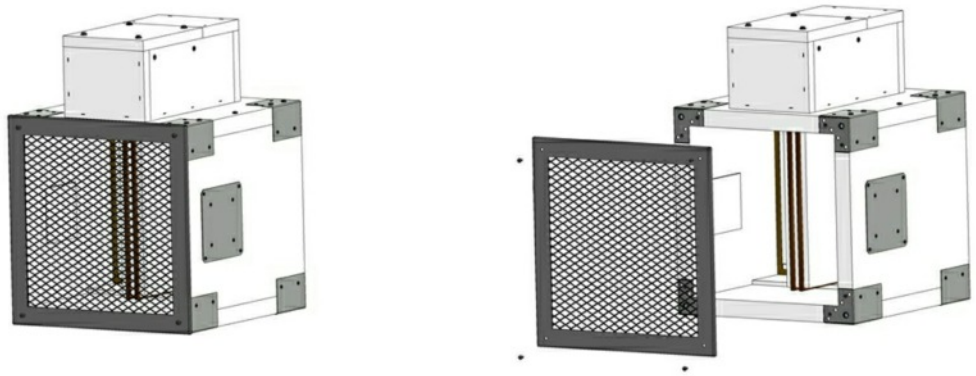

SEDM with cover grille and with flange

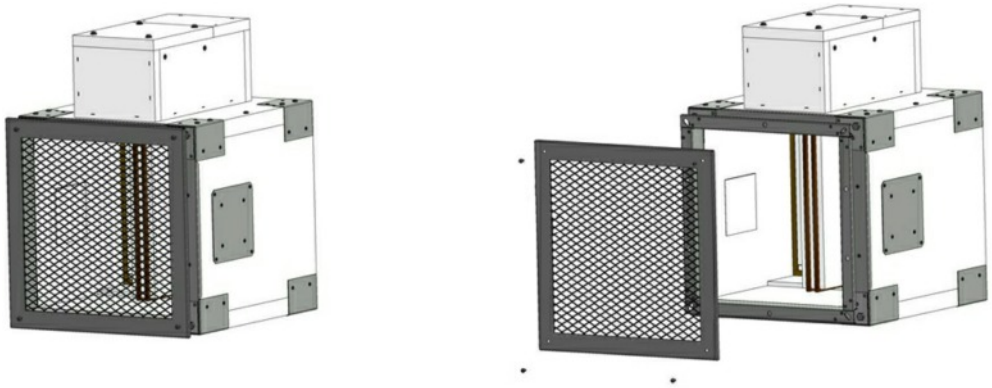

IV. TECHNICAL DATA

8. Pressure loss

8.1. Pressure loss calculation

$$\Delta p = \xi \cdot \rho \cdot \frac{w^2}{2}$$

Δp	[Pa]	presure loss
w	[m.s^{-1}]	air flow speed in nominal damper section
ρ	[kg.m^{-3}]	air density
ξ	[-]	coefficient of local pressure loss for the nominal damper section (see Tab. 9.1.1.)

8.2. Determination of pressure loss by using diagram ρ = 1,2 kg.m^{-3}

Diagram 8.2.1. Pressure losses for air density ρ =1,2 kg.m^{-3}

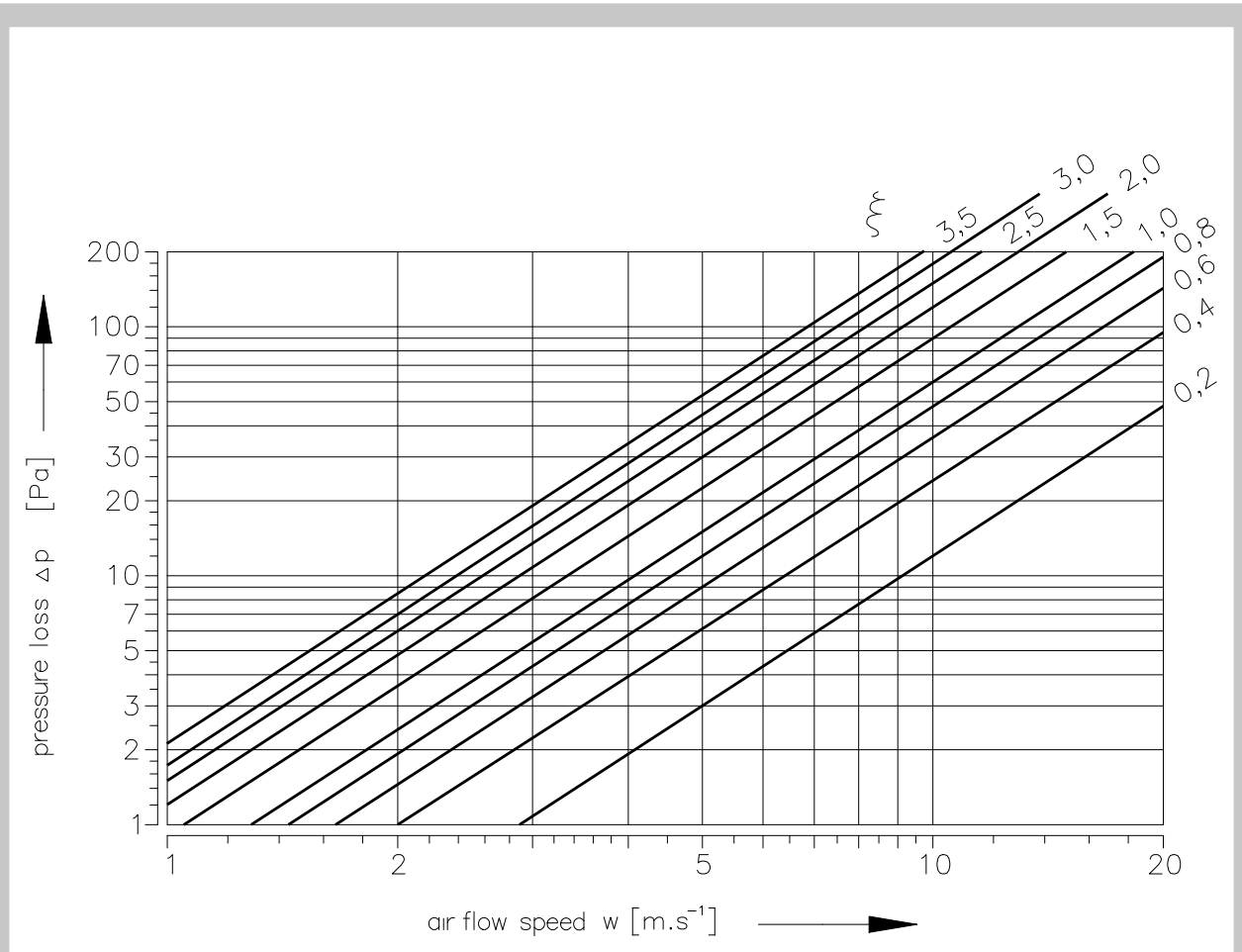

9. Coefficient of local pressure loss

9.1. Coefficient of local pressure loss ξ (-)

Tab. 9.1.1. Coefficient of local pressure loss

	B										
A	**180**	**200**	**225**	**250**	**280**	**300**	**315**	**355**	**400**	**450**	**500**
180	3,1433	2,5092	2,0162	1,6711	1,4773	1,3192	1,1951	1,0336	0,9095	0,8126	0,7429
200	2,9529	2,3545	1,9584	1,5657	1,3991	1,2512	1,1186	0,9673	0,8500	0,7582	0,6919
225	2,7795	2,2032	1,8326	1,4909	1,3226	1,1594	1,0438	0,9231	0,8143	0,7157	0,6562
250	2,6401	2,1012	1,7204	1,3923	1,2172	1,0795	0,9911	0,8568	0,7514	0,6698	0,6120
280	2,5721	2,0417	1,6677	1,3413	1,1577	1,0506	0,9333	0,8313	0,7242	0,6375	0,5984
300	2,5075	1,9822	1,5725	1,2784	1,1373	1,0081	0,9078	0,8075	0,7055	0,6239	0,5627
315	2,4055	1,9108	1,5283	1,2376	1,0897	0,9843	0,8806	0,7752	0,6800	0,6052	0,5525
355	2,3103	1,8343	1,4552	1,2121	1,0676	0,9265	0,8602	0,7412	0,6511	0,5797	0,5287
400	2,2304	1,7697	1,3787	1,1679	1,0217	0,9044	0,8279	0,7140	0,6256	0,5576	0,5083
450	2,1607	1,7153	1,3413	1,1305	1,0013	0,8823	0,8007	0,6902	0,6052	0,5389	0,4913
500	2,1080	1,6711	1,3362	1,1016	0,9452	0,8483	0,7633	0,6715	0,5882	0,5236	0,4777
550	2,0723	1,6507	1,2971	1,0829	0,9231	0,8194	0,7514	0,6613	0,5797	0,5185	0,4726
560	2,0587	1,6320	1,2886	1,0744	0,9061	0,8211	0,7429	0,6545	0,5729	0,5100	0,4658
600	2,0247	1,6116	1,2801	1,0659	0,8959	0,8041	0,7327	0,6443	0,5627	0,5066	0,4590
630	2,0128	1,5946	1,2733	1,0489	0,8857	0,7871	0,7259	0,6392	0,5593	0,4981	0,4539
650	2,0043	1,5742	1,2546	1,0421	0,8687	0,7786	0,7225	0,6324	0,5559	0,4947	0,4505
700	1,9873	1,5674	1,2512	1,0319	0,8517	0,7701	0,7157	0,6290	0,5508	0,4913	0,4471
710	1,9720	1,5623	1,2274	1,0268	0,8534	0,7548	0,7089	0,6256	0,5474	0,4879	0,4437
750	1,9567	1,5419	1,2172	1,0183	0,8483	0,7497	0,6987	0,6188	0,5406	0,4845	0,4386
800	1,9380	1,5351	1,2087	1,0081	0,8432	0,7446	0,6953	0,6137	0,5372	0,4777	0,4352
900	1,9074	1,5096	1,2053	0,9911	0,8228	0,7259	0,6834	0,6035	0,5270	0,4692	0,4284
1000	1,8836	1,4909	1,2002	0,9792	0,7939	0,7106	0,6749	0,5950	0,5202	0,4641	0,4216
1100	1,8615	1,4739	1,1917	0,9673	0,7752	0,7004	0,6664	0,5865	0,5134	0,4573	0,4165
1250	1,8428	1,4569	1,1781	0,9554	0,7735	0,6987	0,6579	0,5814	0,5083	0,4522	0,4114
1400	1,8241	1,4433	1,1696	0,9469	0,7718	0,6970	0,6511	0,5746	0,5032	0,4471	0,4080
1500	1,8139	1,4348	1,1611	0,9418	0,7684	0,6936	0,6477	0,5712	0,4998	0,4454	0,4046
1600	1,8054	1,4280	1,1169	0,9367	0,7667	0,6902	0,6443	0,5678	0,4981	0,4420	0,4029

	B										
A	**550**	**560**	**600**	**630**	**650**	**700**	**710**	**750**	**800**	**900**	**1000**
180	0,6987	0,6800	0,6477	0,6273	0,5984	0,5933	0,5831	0,5627	0,5474	0,5168	0,4947
200	0,6545	0,6341	0,6052	0,5848	0,5627	0,5525	0,5440	0,5304	0,5100	0,4828	0,4607
225	0,6188	0,5916	0,5712	0,5559	0,5355	0,5287	0,5134	0,5032	0,4777	0,4556	0,4318
250	0,5882	0,5610	0,5372	0,5168	0,4998	0,4913	0,4862	0,4726	0,4488	0,4335	0,4063
280	0,5559	0,5304	0,5151	0,4947	0,4828	0,4794	0,4726	0,4471	0,4301	0,4216	0,3927
300	0,5321	0,5202	0,4947	0,4743	0,4675	0,4624	0,4573	0,4267	0,4182	0,4029	0,3808
315	0,5134	0,5049	0,4692	0,4658	0,4471	0,4386	0,4318	0,4097	0,4046	0,3825	0,3655
355	0,4896	0,4828	0,4556	0,4454	0,4318	0,4216	0,4131	0,3961	0,3876	0,3655	0,3485
400	0,4743	0,4641	0,4471	0,4284	0,4182	0,4097	0,3978	0,3842	0,3723	0,3519	0,3349
450	0,4556	0,4488	0,4352	0,4131	0,4046	0,3927	0,3842	0,3757	0,3587	0,3383	0,3230
500	0,4505	0,4369	0,4182	0,4012	0,3876	0,3791	0,3723	0,3587	0,3485	0,3298	0,3145
550	0,4437	0,4267	0,4148	0,3978	0,3808	0,3757	0,3655	0,3519	0,3451	0,3247	0,3111
560	0,4386	0,4250	0,4097	0,3910	0,3757	0,3723	0,3638	0,3451	0,3400	0,3213	0,3060
600	0,4369	0,4199	0,3978	0,3876	0,3672	0,3638	0,3587	0,3434	0,3366	0,3162	0,3026
630	0,4301	0,4148	0,3927	0,3825	0,3621	0,3570	0,3536	0,3417	0,3315	0,3128	0,2992
650	0,4267	0,4097	0,3927	0,3808	0,3604	0,3553	0,3502	0,3400	0,3298	0,3111	0,2975
700	0,4250	0,4080	0,3859	0,3791	0,3587	0,3536	0,3485	0,3383	0,3281	0,3077	0,2941
710	0,4216	0,4063	0,3808	0,3740	0,3570	0,3502	0,3468	0,3349	0,3247	0,3060	0,2924
750	0,4199	0,4029	0,3757	0,3706	0,3553	0,3468	0,3434	0,3315	0,3213	0,3026	0,2873
800	0,4182	0,3978	0,3757	0,3655	0,3536	0,3451	0,3400	0,3281	0,3179	0,2992	0,2856
900	0,4148	0,3910	0,3757	0,3604	0,3519	0,3417	0,3332	0,3179	0,3128	0,2941	0,2805
1000	0,4012	0,3859	0,3706	0,3553	0,3502	0,3349	0,3281	0,3145	0,3077	0,2907	0,2771
1100	0,3927	0,3808	0,3587	0,3502	0,3417	0,3298	0,3247	0,3094	0,3043	0,2856	0,2737
1250	0,3876	0,3757	0,3536	0,3451	0,3383	0,3281	0,3213	0,3077	0,2992	0,2822	0,2703
1400	0,3825	0,3723	0,3502	0,3417	0,3332	0,3264	0,3179	0,3043	0,2975	0,2805	0,2669
1500	0,3791	0,3706	0,3485	0,3400	0,3298	0,3247	0,3162	0,3026	0,2958	0,2788	0,2652
1600	0,3774	0,3672	0,3451	0,3383	0,3264	0,3230	0,3145	0,2992	0,2941	0,2771	0,2635

10. Noise data

10.1. Level of acoustic output corrected with filter A

Tab. 10.1.1. Level of acoustic output corrected with filter A

Air velocity 4 m/s																						
Level of acoustic output [dB]																						
A	B																					
	180	200	225	250	280	300	315	355	400	450	500	550	560	600	630	650	700	710	750	800	900	1000
180	56	49	48	46	44	42	41	41	40	40	40	40	40	40	40	40	40	38	38	37	38	38
200	52	48	45	44	41	41	41	41	40	40	39	39	39	38	38	38	37	37	37	36	37	37
225	50	47	45	40	40	40	41	40	39	39	39	38	38	36	36	37	37	36	36	36	36	36
250	49	45	44	42	40	40	40	39	38	38	37	37	37	37	37	37	37	37	37	36	36	36
280	47	45	40	40	40	39	38	37	37	37	37	37	37	36	36	36	36	36	36	36	35	35
300	47	44	40	40	39	39	39	37	36	37	37	37	37	35	35	35	35	35	36	36	36	35
315	47	44	40	40	39	39	37	37	37	36	36	36	36	36	36	36	36	35	35	35	34	34
355	46	43	40	39	39	37	37	36	36	36	36	35	35	35	35	35	35	35	33	34	35	35
400	47	42	40	39	37	37	36	36	36	35	35	35	35	35	35	35	34	34	34	34	33	33
450	45	42	40	39	37	37	37	36	35	35	35	35	35	35	35	35	35	35	34	34	34	34
500	45	40	39	38	37	36	36	36	35	35	35	34	34	33	33	34	34	34	33	33	33	33
550	44	40	40	38	37	37	36	36	35	35	34	34	34	34	34	33	33	33	33	33	33	33
560	44	40	40	38	37	37	36	35	35	35	34	34	34	34	34	34	33	33	33	33	33	33
600	44	40	38	36	36	36	36	36	35	35	35	35	35	33	33	33	33	32	32	32	32	32
630	44	40	38	37	36	36	36	35	35	35	34	34	34	34	34	34	33	33	33	33	32	32
650	44	40	38	37	36	36	36	35	35	35	34	34	34	34	34	34	33	33	33	33	33	33
700	43	39	38	38	36	36	36	37	35	36	34	34	34	34	34	33	33	33	33	33	33	33
710	43	39	38	38	36	36	36	37	35	36	34	34	34	34	34	33	33	33	33	33	33	33
750	43	40	38	37	36	35	35	34	34	34	34	34	33	33	33	33	33	33	33	33	33	33
800	43	40	37	37	36	36	35	34	34	34	34	33	33	33	33	33	33	33	33	33	33	33
900	43	40	37	36	36	36	35	34	34	34	34	33	33	33	33	33	33	33	33	33	33	33
1000	43	39	37	37	37	36	35	35	34	34	34	33	33	33	33	33	33	33	33	33	33	33
1100	42	39	37	37	37	35	35	34	34	34	33	33	33	33	33	33	33	33	32	32	32	32
1250	42	39	37	37	37	35	35	34	34	34	34	34	33	33	33	33	33	33	32	32	32	32
1400	42	39	37	37	37	35	35	34	34	34	33	33	33	33	33	33	33	33	32	32	32	31
1500	42	39	37	37	37	35	35	34	34	34	33	33	33	33	33	33	33	33	32	32	32	31
1600	42	39	37	37	37	35	35	34	34	34	33	33	33	33	33	33	33	33	32	32	32	31

Tab. 10.1.2. Level of acoustic output corrected with filter A

Air velocity 5 m/s																						
Level of acoustic output [dB]																						
A	B																					
	180	200	225	250	280	300	315	355	400	450	500	550	560	600	630	650	700	710	750	800	900	1000
180	>55	55	53	52	49	47	48	47	47	47	46	46	46	46	46	45	45	45	45	45	45	45
200	>55	55	52	49	48	48	47	47	47	45	45	45	44	44	44	44	45	45	45	45	45	45
225	>55	54	50	48	47	47	47	45	44	44	44	44	44	44	44	44	44	44	44	44	44	43
250	>55	52	49	48	47	46	46	44	44	44	44	44	44	44	43	43	43	43	43	43	43	43
280	54	50	49	47	46	45	45	44	44	44	43	43	43	43	42	42	42	42	42	42	42	42
300	54	49	47	46	45	45	44	44	43	43	43	43	43	42	42	42	42	41	42	42	42	41
315	54	51	48	47	45	45	44	44	44	43	43	42	42	41	41	41	41	41	41	41	41	41
355	54	50	48	45	44	43	43	43	42	42	42	41	41	41	41	41	41	41	41	41	40	40
400	54	49	46	45	43	43	43	43	42	42	41	40	40	40	40	40	40	40	40	40	40	40
450	52	47	46	43	42	42	42	41	41	40	40	40	40	40	40	40	40	40	40	39	39	39
500	51	48	46	44	43	43	43	41	41	40	40	40	40	40	40	40	40	40	39	39	39	39
550	49	47	46	44	43	43	42	41	40	40	40	40	40	40	40	39	39	39	39	39	39	38
560	49	47	46	44	43	43	42	41	40	40	40	40	40	40	40	39	39	39	39	39	39	38
600	50	47	45	43	43	42	42	41	40	40	40	40	40	40	39	39	39	39	39	38	38	38
630	50	48	45	43	43	42	42	41	40	40	40	40	40	40	40	40	40	40	38	38	38	38
650	50	48	45	43	42	42	42	41	40	40	40	40	39	39	39	39	39	38	38	38	38	38
700	50	48	45	42	42	42	42	41	40	40	40	40	39	39	39	39	39	38	38	38	38	38
710	50	48	45	42	42	42	42	41	40	40	40	40	39	39	39	39	39	38	38	38	38	38
750	50	47	45	42	42	42	42	41	40	40	40	40	39	39	39	39	39	38	38	38	38	38
800	50	47	45	42	42	42	42	41	40	40	40	40	39	39	39	39	39	38	38	38	38	38
900	49	47	44	42	42	42	41	40	40	40	40	39	39	39	39	39	38	38	38	38	38	38
1000	49	47	43	42	42	42	40	40	40	40	40	39	39	39	39	38	38	38	38	38	38	38
1100	49	47	43	42	42	42	40	40	40	40	40	39	39	39	39	38	38	38	38	38	38	38
1250	49	47	43	42	42	42	40	40	40	40	39	39	39	39	38	38	38	38	38	38	38	38
1400	48	46	43	42	42	41	40	40	40	39	38	38	38	38	38	38	38	38	38	38	38	37
1500	48	46	43	42	41	41	40	40	40	39	38	38	38	38	38	38	38	38	38	38	38	37
1600	48	46	43	42	41	41	40	40	40	39	38	38	38	38	38	38	38	38	38	38	38	37

Tab. 10.1.3. Level of acoustic output corrected with filter A

Air velocity 6 m/s																						
Level of acoustic output [dB]																						
A	B																					
	180	200	225	250	280	300	315	355	400	450	500	550	560	600	630	650	700	710	750	800	900	1000
180	>55	>55	>55	>55	55	54	54	54	54	52	52	52	52	52	52	52	52	52	51	51	51	51
200	>55	>55	>55	55	54	54	53	53	52	51	50	50	50	50	50	50	50	50	50	50	50	48
225	>55	>55	>55	54	52	52	52	51	50	50	49	48	48	48	48	48	48	48	48	48	47	47
250	>55	>55	55	53	52	52	51	50	50	49	48	48	48	47	47	47	47	47	47	47	47	47
280	>55	>55	54	52	51	50	50	49	48	48	48	47	46	46	46	46	46	46	46	46	46	46
300	>55	>55	54	52	50	50	50	48	47	47	46	46	46	46	46	46	46	46	46	46	47	45
315	>55	55	53	52	50	49	50	48	47	46	46	46	46	46	46	46	46	46	47	47	46	46
355	>55	55	53	51	50	49	48	47	47	46	46	46	46	46	46	46	46	46	46	46	46	46
400	>55	54	52	50	49	48	48	47	45	45	45	45	45	45	45	45	45	45	45	45	45	45
450	>55	54	51	50	48	48	47	46	45	45	45	45	45	45	45	45	45	45	45	45	45	45
500	55	54	51	49	48	48	47	45	45	45	45	45	45	45	45	45	45	45	45	45	43	43
550	55	53	50	50	48	47	45	45	45	45	45	45	45	45	45	45	45	45	45	44	44	44
560	55	53	50	50	48	47	45	45	45	45	45	45	45	45	45	45	45	45	45	44	44	44
600	55	53	50	50	48	47	45	45	45	45	45	45	45	44	44	44	44	44	44	44	44	44
630	55	53	50	49	48	47	45	45	45	45	45	45	44	44	44	44	44	44	44	44	44	44
650	55	52	50	49	48	47	45	45	45	45	45	45	44	44	44	44	44	44	43	43	43	43
700	55	52	50	48	48	46	46	45	45	45	45	45	44	44	44	44	44	44	43	43	43	43
710	55	52	50	48	48	46	46	45	45	45	45	45	44	44	44	44	44	44	43	43	43	43
750	55	52	50	48	48	46	45	45	45	45	45	45	44	44	44	44	44	44	43	43	43	43
800	55	52	50	48	48	46	45	45	45	45	45	45	44	44	44	44	43	43	43	43	43	43
900	55	52	49	48	47	45	45	45	45	45	45	44	43	43	43	43	43	43	43	43	43	43
1000	55	52	49	48	47	45	45	45	45	45	44	44	44	43	43	43	43	43	43	43	43	43
1100	54	52	49	48	46	45	45	45	45	44	44	44	44	43	43	43	43	43	43	43	43	43
1250	54	52	49	47	45	45	45	45	45	44	44	44	44	43	43	43	43	43	43	43	43	43
1400	54	52	48	48	46	44	44	44	45	44	43	43	43	43	43	43	43	43	43	43	43	42
1500	54	52	48	48	45	44	44	44	45	44	43	43	43	43	43	43	43	43	43	43	42	42
1600	54	52	48	48	45	44	44	45	45	45	43	43	43	43	43	43	43	43	43	42	42	42

Tab. 10.1.4. Level of acoustic output corrected with filter A

Air velocity 7 m/s																						
Level of acoustic output [dB]																						
A	B																					
	180	200	225	250	280	300	315	355	400	450	500	550	560	600	630	650	700	710	750	800	900	1000
180	>61	>61	>61	>61	61	60	60	58	58	57	56	56	56	55	55	55	55	55	55	56	55	55
200	>61	>61	>61	>61	59	58	58	57	56	55	55	55	55	55	55	55	55	54	54	54	54	54
225	>61	>61	>61	60	57	56	56	55	55	55	54	54	53	53	53	53	53	53	53	53	53	53
250	>61	>61	>61	58	56	56	56	55	54	53	53	53	53	53	52	52	52	52	52	53	52	52
280	>61	>61	60	57	56	55	55	54	53	52	52	52	51	51	51	51	51	51	51	51	50	50
300	>61	61	58	57	55	54	54	53	53	52	52	52	52	52	52	50	50	50	50	50	50	50
315	>61	61	57	56	55	55	54	53	52	52	51	51	51	51	50	50	50	50	50	49	49	49
355	>61	61	57	55	54	53	53	52	52	52	51	50	50	50	50	50	49	49	49	48	48	48
400	>61	60	57	55	53	53	53	52	51	51	49	49	49	49	49	48	48	48	48	48	48	48
450	>61	59	56	54	52	52	52	51	50	50	50	48	48	48	48	48	48	48	48	48	48	48
500	60	58	55	54	53	52	52	50	50	50	48	48	48	48	48	48	48	48	48	48	48	48
550	60	58	55	54	53	52	52	50	50	48	48	48	48	48	48	48	48	48	48	48	48	48
560	60	58	55	54	53	52	52	50	50	48	48	48	48	48	48	48	48	48	48	48	48	48
600	60	58	55	54	52	52	51	50	49	48	48	48	48	48	48	48	48	48	48	48	48	48
630	60	58	55	53	51	51	51	50	49	48	48	48	48	48	48	48	48	48	48	48	48	48
650	60	58	55	53	52	51	51	50	49	48	48	48	48	48	48	48	48	48	48	48	48	48
700	59	58	55	53	52	51	51	50	49	48	48	48	48	48	48	48	48	48	48	48	48	48
710	59	58	55	53	52	51	51	50	49	48	48	48	48	48	48	48	48	48	48	48	48	48
750	59	58	55	53	52	51	51	50	49	48	48	48	48	48	48	48	48	48	48	48	48	48
800	59	58	55	53	52	51	51	50	49	48	48	48	48	48	48	48	48	48	48	48	48	48
900	58	56	53	53	52	50	50	48	48	47	48	48	48	48	48	48	48	48	48	48	47	47
1000	58	56	53	53	51	50	50	48	48	48	48	48	48	48	48	48	48	48	48	48	47	47
1100	58	56	53	53	51	50	50	48	48	48	48	48	48	48	48	48	48	48	48	47	47	47
1250	58	56	53	53	51	50	50	48	48	48	48	48	48	48	48	48	48	48	48	47	47	47
1400	58	56	53	52	51	50	48	48	47	47	47	47	47	47	47	47	47	47	47	47	47	46
1500	58	56	53	52	51	50	50	48	47	47	47	47	47	47	47	47	47	47	47	47	47	46
1600	58	56	53	52	51	50	50	48	47	47	47	47	47	47	47	47	47	47	47	47	47	46

Tab. 10.1.5. Level of acoustic output corrected with filter A

Air velocity 8 m/s																						
Level of acoustic output [dB]																						
A	B																					
	180	200	225	250	280	300	315	355	400	450	500	550	560	600	630	650	700	710	750	800	900	1000
180	>63	>63	>63	>63	>63	>63	>63	63	62	61	61	60	60	60	60	60	60	60	60	60	60	59
200	>63	>63	>63	>63	>63	62	62	61	60	60	60	60	60	60	60	60	60	60	59	59	59	58
225	>63	>63	>63	>63	>63	61	61	60	60	58	58	58	58	58	58	58	58	58	58	57	57	57
250	>63	>63	>63	>63	61	60	60	59	58	58	57	57	57	57	57	57	57	57	56	56	56	56
280	>63	>63	>63	>63	59	59	59	58	58	57	57	56	56	56	56	56	56	56	56	55	55	54
300	>63	>63	62	61	59	59	59	58	57	56	56	55	55	55	55	55	55	55	55	54	54	54
315	>63	>63	62	61	59	59	58	57	57	56	55	55	55	55	55	55	55	55	55	55	54	54
355	>63	>63	63	59	58	58	57	56	55	55	54	54	54	54	54	54	53	53	53	53	53	53
400	>63	63	62	60	58	57	56	56	55	54	54	54	54	54	54	54	53	53	53	53	52	52
450	>63	63	60	58	57	56	56	55	55	55	54	53	53	53	53	53	53	53	53	53	52	52
500	>63	62	60	58	56	55	55	54	54	54	53	53	53	53	53	53	53	53	53	52	51	51
550	>63	62	59	58	56	56	55	55	54	53	53	53	53	53	53	53	53	53	52	52	51	51
560	>63	62	59	58	56	56	55	55	54	53	53	53	53	53	53	53	53	53	52	52	51	51
600	>63	62	59	58	56	55	55	54	54	53	53	53	53	53	52	52	52	51	51	51	50	50
630	>63	62	59	58	56	55	55	54	54	53	53	53	53	53	52	52	52	51	50	50	50	50
650	>63	61	59	58	56	55	55	54	54	53	53	53	52	51	51	51	51	51	50	50	50	50
700	63	62	59	57	56	55	55	54	54	53	53	53	52	51	51	50	50	50	50	50	49	49
710	63	62	59	57	56	55	55	54	54	53	53	53	52	51	51	50	50	50	50	50	49	49
750	63	62	59	57	56	55	55	54	54	53	52	52	52	52	51	50	50	50	50	50	50	49
800	62	60	57	57	56	55	54	54	54	52	52	52	52	51	51	50	50	50	50	50	50	49
900	62	60	57	56	55	55	54	53	53	52	52	51	51	51	50	50	50	50	50	50	50	50
1000	62	60	57	56	56	55	54	53	53	52	52	51	51	51	50	50	50	50	50	50	50	50
1100	62	60	57	56	56	55	54	53	53	52	51	51	51	50	50	50	50	50	50	50	50	50
1250	62	61	58	56	56	54	54	53	53	52	50	50	50	50	50	50	49	49	49	49	49	49
1400	62	61	57	56	56	53	54	53	53	50	50	50	50	50	50	50	49	49	49	49	49	49
1500	62	61	57	56	56	54	54	53	52	50	50	50	50	50	50	50	49	49	49	49	49	49
1600	62	61	57	56	56	54	54	53	52	50	50	50	50	50	50	50	49	49	49	49	49	49

Tab. 10.1.6. Level of acoustic output corrected with filter A

Air velocity 9 m/s																						
Level of acoustic output [dB]																						
A	B																					
	180	200	225	250	280	300	315	355	400	450	500	550	560	600	630	650	700	710	750	800	900	1000
180	>65	>65	>65	>65	>65	>65	>65	>65	>65	65	64	64	64	64	64	64	64	64	64	63	63	63
200	>65	>65	>65	>65	>65	>65	>65	65	64	64	63	63	63	62	62	62	62	62	62	62	61	61
225	>65	>65	>65	>65	>65	>65	65	63	63	62	61	61	61	61	61	61	61	61	61	61	60	60
250	>65	>65	>65	>65	>65	65	65	63	62	61	60	60	60	60	60	60	60	60	60	60	60	60
280	>65	>65	>65	>65	64	63	62	61	61	60	60	60	60	59	59	59	59	59	59	59	58	58
300	>65	>65	>65	65	63	62	62	61	60	60	60	60	60	60	60	59	59	59	59	59	59	59
315	>65	>65	>65	64	63	62	61	61	60	60	60	60	60	59	59	59	59	59	59	59	59	58
355	>65	>65	>65	64	62	61	60	60	60	60	60	59	59	59	59	58	58	58	58	58	58	58
400	>65	>65	>65	63	61	60	60	59	58	58	58	58	58	58	58	58	58	58	58	57	57	57
450	>65	>65	65	63	60	60	60	59	58	58	58	57	57	57	57	57	57	57	57	56	56	56
500	>65	>65	64	61	60	60	60	59	58	57	57	57	57	57	56	56	56	56	56	56	55	55
550	>65	>65	62	62	60	60	58	57	58	58	57	57	57	56	56	56	56	56	56	56	55	55
560	>65	>65	62	62	60	60	58	57	58	58	57	57	57	56	56	56	56	56	56	56	55	55
600	>65	>65	62	62	60	59	58	58	58	57	56	56	56	56	56	56	55	55	55	55	55	55
630	>65	>65	62	62	60	59	58	58	58	57	56	56	56	56	56	56	55	55	55	55	55	55
650	>65	>65	62	62	59	59	58	58	58	57	56	56	56	56	56	56	55	55	55	55	55	55
700	>65	>65	62	61	59	59	58	58	57	56	55	55	55	55	55	55	55	55	55	55	55	54
710	>65	>65	62	61	59	59	58	58	57	56	55	55	55	55	55	55	55	55	55	55	55	54
750	>65	>65	62	61	59	59	58	57	57	56	55	55	55	55	55	55	55	55	55	55	55	55
800	>65	64	62	61	59	59	58	57	57	56	55	55	55	55	55	55	55	55	55	55	54	54
900	>65	64	62	60	60	59	58	57	57	55	55	55	55	55	55	55	54	55	55	55	54	54
1000	>65	64	60	60	58	58	58	57	57	55	55	55	55	55	55	55	55	55	55	55	54	54
1100	>65	64	60	59	58	58	57	57	57	55	55	55	55	55	55	55	55	55	55	55	54	54
1250	>65	64	60	59	58	58	57	57	56	55	55	55	55	55	54	54	54	54	54	54	54	53
1400	>65	64	61	60	58	58	57	57	56	56	55	55	55	55	55	54	54	54	54	54	53	53
1500	>65	64	60	60	58	58	56	56	56	56	55	55	55	55	55	54	54	54	53	53	53	53
1600	>65	64	60	60	58	58	56	56	56	56	55	55	55	55	55	54	54	54	53	53	53	53

V. MATERIAL, FINISHING

11. Material

11.1. Damper casings and blades are made of fire resistant asbestos free boards made of mineral fibres.

Fasteners are galvanized.

11.2. According to the customer's requirements, damper can be made of stainless material.

Specifications for stainless-steel models – classification of stainless steel:

- Class A2 – Food-grade stainless steel (AISI 304 – EN 17240)
- Class A4 – Chemistry-grade stainless steel (AISI 316, 316L – EN 17346, 17349)

The respective stainless steel is the material for all components present or accessing the damper interior; components outside the damper body are typically from galvanised sheet metal (fasteners for mounting the servo drive or mechanics, mechanics components except Item 4), frame components.

The following components, including the fasteners, are made from stainless steel at all times:

1) Damper body and all components permanently attached
2) Leaf holders, including pins, metal parts of leaf
3) Control components inside the damper (leaf angle selector, pin with lever)
4) Mechanical components entering the interior of damper body (lower sheet of mechanics, lock holder “1”, lock lever “2”, lock spring, 8 dia. stopper pin, mechanics pin)
5) Inspection hole cover including the clip and fasteners (if they are parts of the cover)
6) Bearing for torque transfer from the lever with pin on the angle selector at the leaf (made from AISI 440C)

The leaf of the damper is made from three Promatect-H sheets, thickness 20 mm, connected with galvanised nailed “U” connectors which are sealed with Promat K84 from the outside.

Plastic, rubber and silicon components, sealants, foaming bands, glass-ceramic seals, housings, brass bearings of the leaf, servo drives, and end switches are identical for all material variants of the dampers.

Some fasteners and components are available in one class of stainless steel; the type will be used in all stainless-steel variants.

The leaf in the variants for chemical environments (Class A4) is always treated with a coating of chemically resistant Promat SR.

Any other requirements for the design shall be considered atypical and shall be addressed on an individual basis.

VI. INSPECTION, TESTING

12. Inspection, testing

12.1. The appliance is constructed and preset by the manufacturer, its operation is dependent on proper installation and adjustment.

VII. TRANSPORTATION AND STORAGE

13. Logistic terms

13.1. Dampers are delivered on a pallets. Another required packaging system should be approved and agreed by manufacturer. Packaging material is not returnable in case that another packaging system (material) is required and used and it is not included into final price of damper.

13.2. For unloading and further manipulation with the damper is necessary to use appropriate tooling (forklifts) due to damper weight. Dampers are fragile.

13.3. Dampers are transported by box freight vehicles without direct weather impact, there must not occur any shocks and ambient temperature must not exceed + 50 °C. Dampers must be protected against mechanic damages when transported and manipulated. During transportation, the damper blade must be in the "CLOSED" position.

13.4. Dampers are stored indoor in environment without any aggressive vapours, gases or dust. Indoor temperature must be in the range from -30 °C to +50 °C and maximum relative humidity 95 % (avoid condensation on the damper body). Dampers must be protected against mechanic damages when transported and manipulated.

VIII. ASSEMBLY, ATTENDANCE, MAINTENANCE AND REVISIONS

14. Assembly

14.1. Assembly, maintenance and damper function check can be done only by qualified and trained person, i.e. “AUTHORIZED PERSON” according to the manufacturer documentation. All works done on the fire dampers must be done according international and local norms and laws.

14.2. All effective safety standards and directives must be observed during damper assembly.

14.3. To ensure reliable smoke exhaust damper function it is necessary to avoid blocking the closing mechanism and contact surfaces with collected dust, fibre and sticky materials and solvents.

14.4. **Manual operation**
Without power supply, the damper can be operated manually and fixed in any required position.

14.5. For electrical connection of the actuator use the prefabricated slot in the protection box on the top side of the box.

14.6. If it is necessary to use other position of the connecting holes, then make two holes to the protection box to pull in connecting cables (heat resistant cables) to the cables of damper´s actuator. Protection box is made of calcium silicate plates.

Fig. 47 Connecting holes

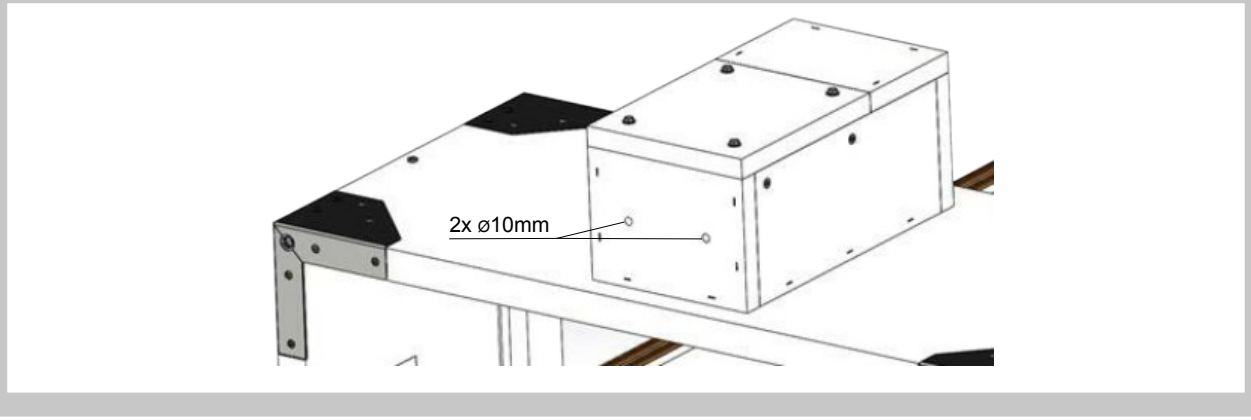

Procedure:

- use drill ø10 and make two holes (see figure 47). It is possible to make 2 holes in any wall of the box.
- pull the heat resistant cable through the calcium silicate plate (wall) and connect with cables from actuator according to above mentioned electrical diagram
- seal up the space in the hall with fire resistant mastic or sealant
- let the sealant harden

15. Entry into service and revisions

15.1. Before entering the dampers into operation after assembly and after sequential revisions, checks and functionality tests of all designs including operation of the electrical components must be successfully provided and finished. After entering into operation, these revisions must be done according to requirement set by national regulations.

In case that dampers are found unable to serve for their function for any cause, it must be clearly marked. The operator is obliged to ensure that the damper is put into condition in which it is ready for function and meanwhile he is obliged to provide the fire protection by another appropriate way.

Results of regular checks, imperfections found and all-important facts connected with the damper function must be recorded in the "FIRE BOOK" and immediately reported to the operator.

15.2. Before entering the dampers into operation after their assembly and by sequential checks, the following checks must be carried out for all designs.

Visual inspection of proper damper integration, inside damper area, damper blade, contact surfaces and silicon sealing.

Inspection hole disassembly: release the covering lid by unscrewing four outer screws than remove it from its original position.

Fig. 48 Inspection hole detail

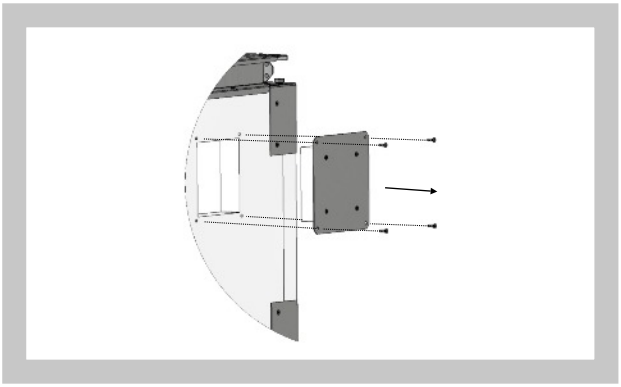

Check of damper blade displacement can be realize after actuating mechanism supply connection or signal connection from higher level control systems. Blade displacement from position “OPEN” to position “CLOSED” and return displacement is checked.

16. Spare parts

16.1. Spare parts are supplied only on basis of an order.

IX. PRODUCT DATA

17. Nameplate

17.1. Nameplate is placed on the damper casing

Fig. 49 Nameplate

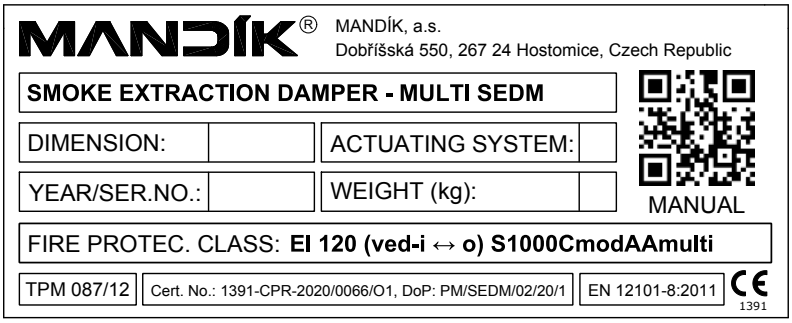

18. Quick review

Tab. 18.1.1. Quick review

Smoke exhaust damper			**SEDM**	
Size			**A = 180 - 1600 mm** **B = 180 - 1000 mm**	
Placement	**wall/ celing** **min. thickness [mm]**	**Filling of space between damper and wall**	**Fire resistance**	**Fig.**
In solid wall construction	100	mineral stone wool, surface is covered by fire protection mastic and cement lime plate	**EI 120 (v_{ew} - i↔o) S1000C_{mod}HOT 400/30AAmulti** **EI 90 (v_{ew} - i↔o) S1500C_{mod}HOT 400/30AAmulti**	17, 18
		mortar or gypsum		19, 20
		Weichschott		21, 22
In solid ceiling construction	150	mineral stone wool, surface is covered by fire protection mastic and cement lime plate	**EI 120 (h_{ow} - i↔o) S1500C_{mod}HOT 400/30AAmulti**	23, 24
		mortar or gypsum		25, 26
		Weichschott		27, 28
In gypsum wall construction	100	mineral stone wool, surface is covered by fire protection mastic and cement lime plate	**EI 120 (v_{ew} - i↔o) S1000C_{mod}HOT 400/30AAmulti** **EI 90 (v_{ew} - i↔o) S1500C_{mod}HOT 400/30AAmulti**	29
		mortar or gypsum		30
		Weichschott		31, 32
On solid wall Construction	100	-	**EI 120 (v_{ew} - i↔o) S1000C_{mod}HOT 400/30AAmulti**	33, 34
On solid ceiling construction	150	-	**EI 90 (h_{ow} - i↔o) S1000C_{mod}HOT 400/30AAmulti**	35, 36
Vertical duct installation	-	-	**EI 120(h_{od} - i↔o) S1000C_{mod}HOT 400/30MAmulti** **EI 120 (h_{od} - i↔o) S1000C_{mod}HOT 400/30AAmulti**	37
Horizontal duct installation	-	-	**EI 120 (v_{ed} - i↔o) S1000C_{mod}HOT 400/30MAmulti** **EI 120 (v_{ed} - i↔o) S1000C_{mod}HOT 400/30AAmulti**	38

X. ORDERING INFORMATION

19. Ordering key

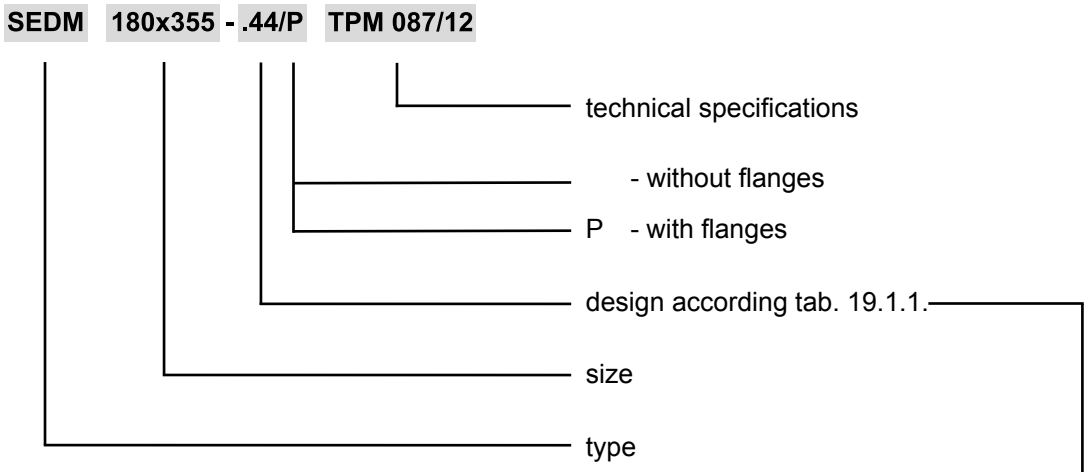

Tab. 19.1.1. Dampers design

Dampers design	Additional digit
with actuating mechanism BLE230(BE230-12), InMax 50.75-S	.44
with actuating mechanism BLE24(BE24-12), InMax 50.75-S	.54
with the communication and supply device BKNE 230-24 and actuating mechanism BLE24(BE24-12)-ST	.66*

*** Design .66 is not available by using actuating mechanism InMax 50.75-S**

MANDÍK, a.s.
Dobříšská 550
26724 Hostomice
Czech Republic
Tel.: +420 311 706 706
E-Mail: mandik@mandik.cz
www.mandik.com

The producer reserves the right for innovations of the product. For actual product information see www.mandik.com