ROFB/RPFB

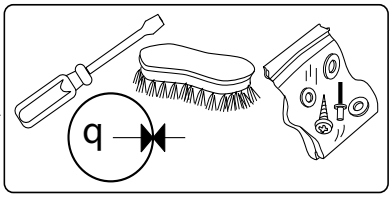

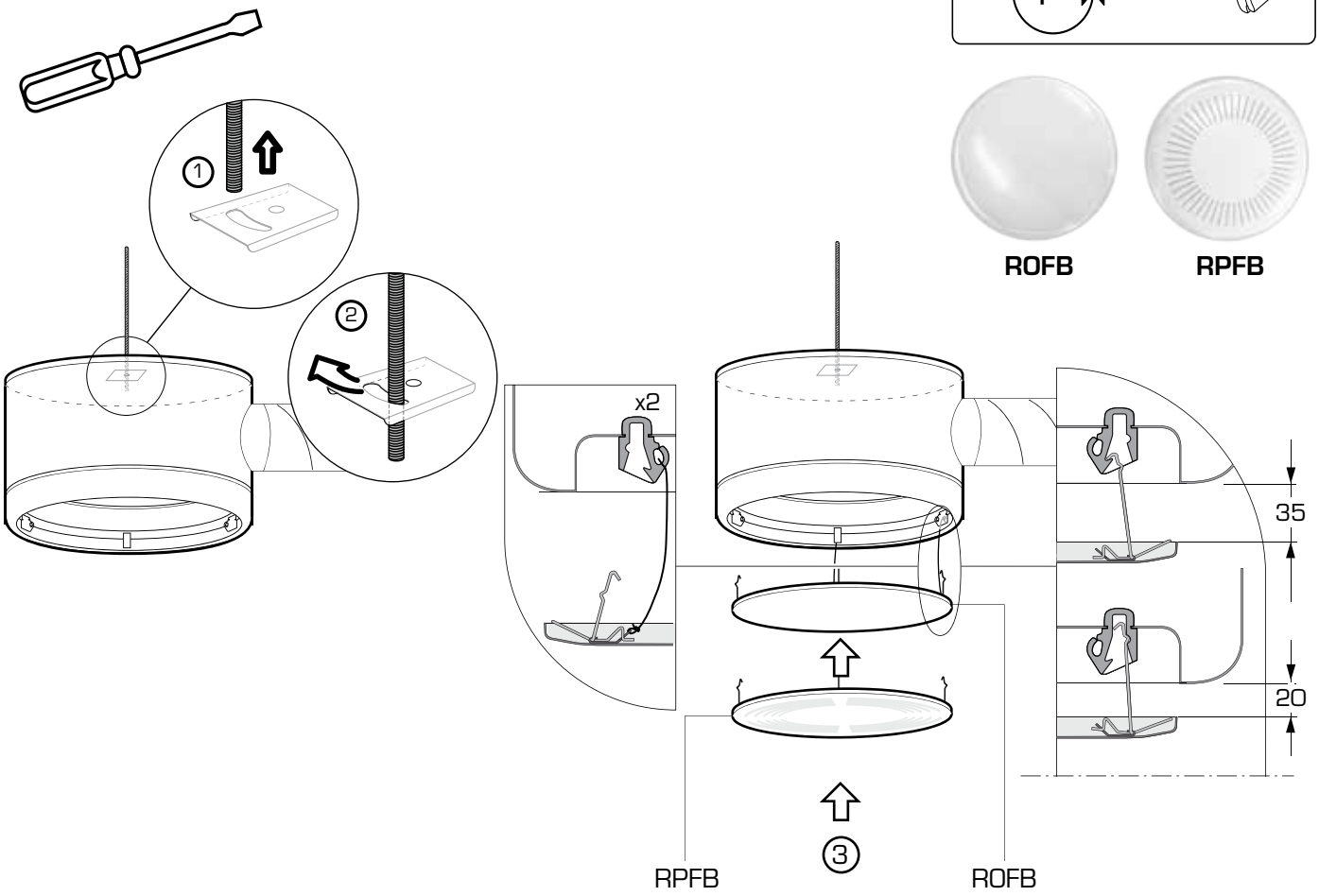

ROFB

RPFB

ROFB/RPFB-100 – ROFB/RPFB-315

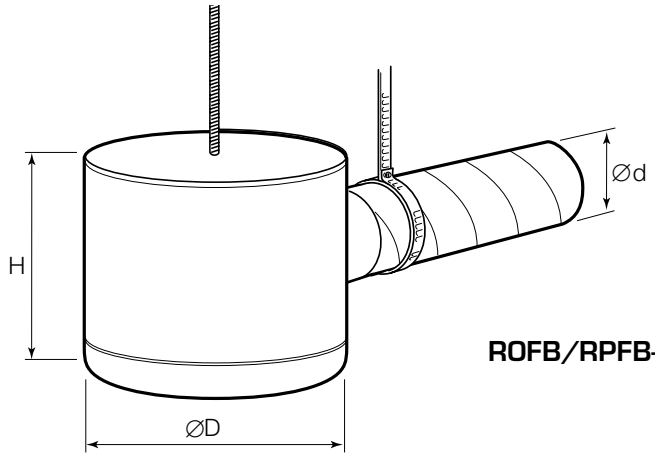

R(O,P)FB	Ød	ØD	A	W,kg
100	99.3	450	240	4.2
125	124.3	450	265	4.5
160	159.3	450	300	4.8
200	199.3	650	340	9.0
250	249.3	650	390	9.6
315	314.3	750	455	12.7
400	399.3	750	515	12.9[1)]

[1)] + IRIS-400 = + 6.4 kg

ROFB/RPFB-400

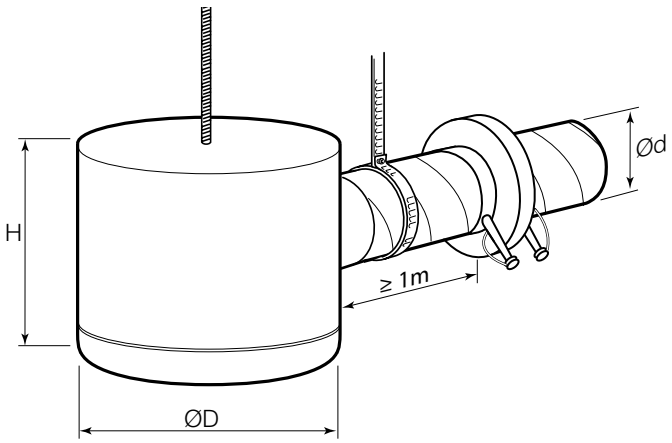

Rätten till ändringar utan föregående meddelande förbehålles. Specifications are subject to alteration without notice. Konstruktions- und Maßänderungen vorbehalten.

© Copyright Fläkt Woods Group 2011. All rights reserved.

FWG_ATD_ROFB_RPFB_Instructions and maintenance_2011.10_UN_8336

ROFB/RPFB

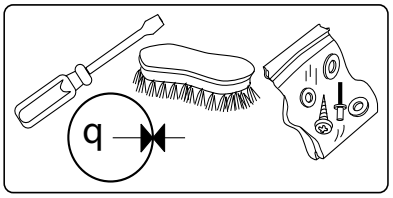

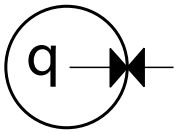

$q = k \sqrt{\Delta p_m}$
(l/s) (Pa)

$q = 3.6k \sqrt{\Delta p_m}$
(m^3/h) (Pa)

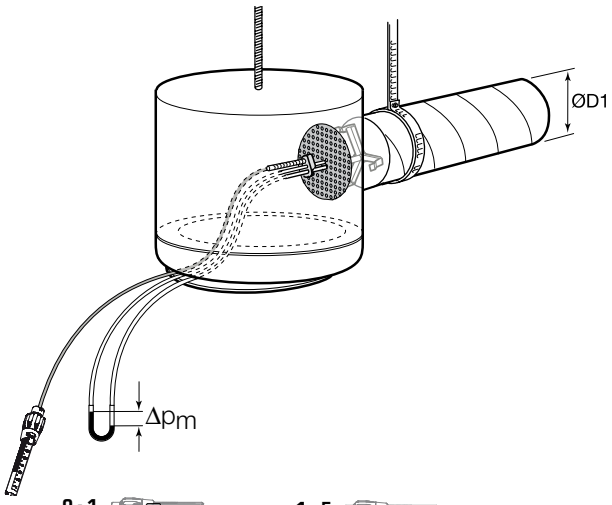

ØD1	0ØD1	1-7ØD1	>7ØD1
100	6.7	6.3	5.9
125	10.1	10.6	10.1
160	17.1	19.9	17.3
200	27	30.8	27.9
250	47.1	48.8	39.9
315	65.9	67.2	64.1
400	IRIS-400	IRIS-400	IRIS-400

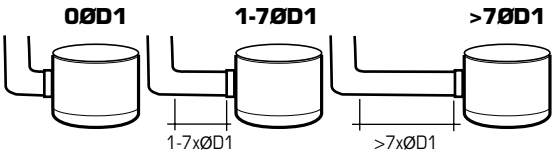

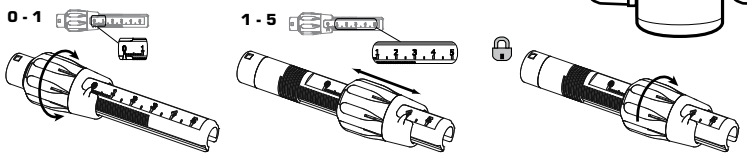

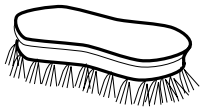

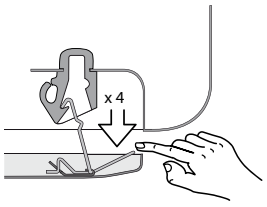

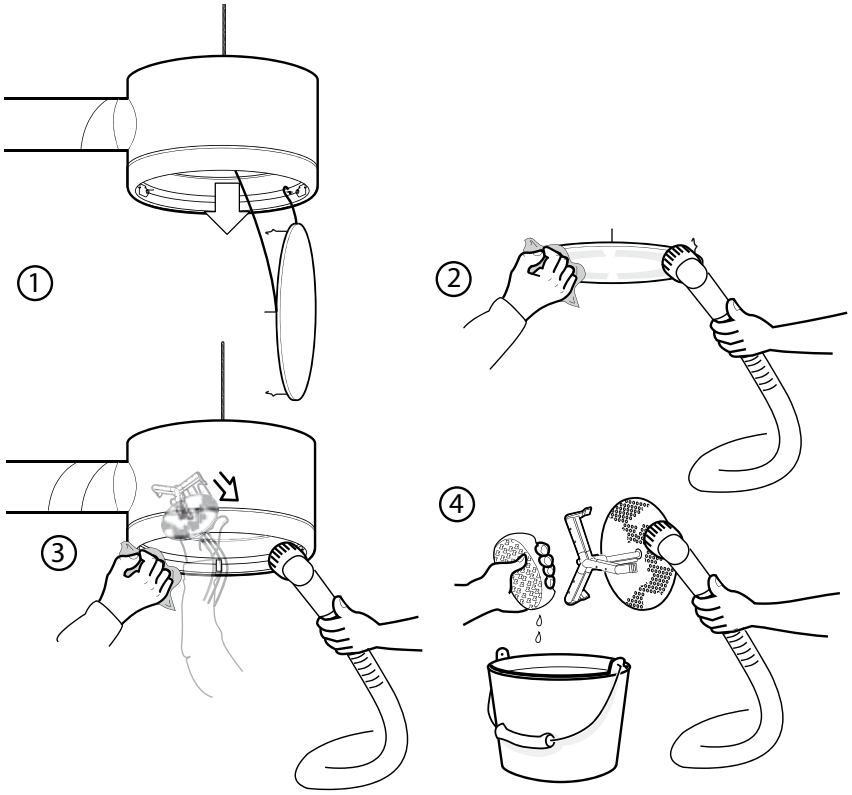

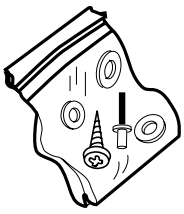

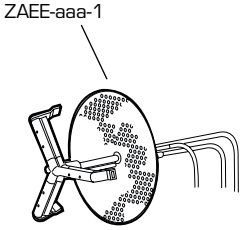

-aaa-
100
125
160
200
250
315

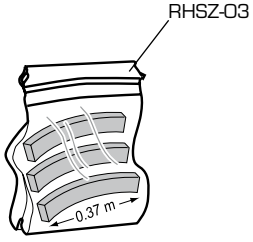

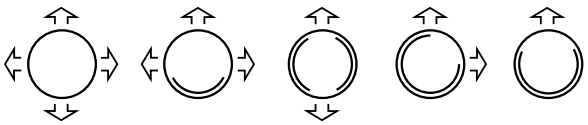

© Copyright Fläkt Woods Group 2011. All rights reserved.