TPM 083/12

Revision 6
Valid from 18/2/19

EN 15650:2010-09

MANDÍK®

FIRE DAMPER

FDMC

These technical specifications state a row of manufactured sizes and models of fire dampers (further only dampers) FDMC. It is valid for production, designing, ordering, delivery, assembly and operation.

I. CONTENT

II. GENERAL INFORMATION

1. Description

1.1. Fire dampers are shutters in duct systems of air-conditioning devices that prevent spreading the fire and combustion products from one fire segment to the other one by means of closing the air duct in the points of fire separating constructions.
Dampers blade automatically closes air duct using a shutting spring or an actuating mechanism back spring. The back spring of the actuating mechanism is started when the thermoelectrical starting mechanism BAT72B-S is activated, when a reset button on BAT72B-S is pushed or when a power supply of the actuating mechanism is stopped.
The damper is sealed with a silicon packing against smoke penetration after closing the blade. At the same time, the damper blade is bedded in a material which enlarges its capacity and air proofs the air duct.
Dampers have one inspection hole, since the shutting device and the inspection hole can be set into the most advantageous position (with respect to the operation and manipulation with the control device).

Fig. 1 Fire damper FDMC

1.2. Damper characteristics

- CE certified acc. to EN 15650
- Tested in accordance with EN 1366-2
- Classified acc. to EN 13501-3+A1
- Fire resistance EIS 60
- External Casing leakage class min. C, Internal leakage class 3 (D=200 - 400 mm) and class 2 (D=180 mm) and class 1 (D=100 - 160 mm) acc. to EN 1751
- Cycling test in class C 10000 acc. to EN 15650
- Corrosion resistant acc. to EN 15650
- ES Certificate of conformity No. 1391-CPR-0090/2014
- Declaration of Perfomance No. PM/FDMC/01/16/1
- Hygienic assessment of fire dampers - Report No. 1.6/13/16/1

1.3. Working conditions

Exact damper function is provided under the following conditions:

a) Maximum air circulation speed: 12 $m.s^{-1}$
Maximum pressure difference: 1500 Pa
b) The air circulation in the whole damper section must be secured as steady on whole surface.

Operation of the dampers does not depend on the direction of air circulation. The dampers can be located in an arbitrary position.

Dampers are suitable for systems without abrasive, chemical and adhesive particles.

Dampers are designed for macroclimatic areas with mild climate according to EN 60 721-3-3.

Temperature in the place of installation is permitted to range from - 30°C to + 50°C.

2. Damper design

2.1. Design with actuating mechanism

Design .40, .50

FDMC is always equipped by electric actuating mechanism BFL, BFN, BF 230-TN or BFL, BFN, BF 230-TN (further only "actuating mechanism"). After being connected to power supply AC/DC 24V or 230V, the actuating mechanism displaces the damper blade into operation position "OPEN" and at the same time it pre-stretches its back spring. When the actuating mechanism is under voltage, the damper blade is in the position "OPEN" and the back spring is pre-stretched. Time needed for full opening of the flap blade from the position "CLOSED" to the position "OPEN" is maximum 140 sec. If the actuating power supply is cut off (due to loss of supply voltage, or pushing the reset button on the thermoelectrical starting mechanism BAT), the back spring displaces the damper blade into the breakdown position "CLOSED". The time of displacing the blade from the position "OPEN" to the position "CLOSED" takes maximum 20 sec. In case that the power supply is restored again (the blade can be in any position), the actuating mechanism starts to re-displace the damper blade into the position "OPEN".
A thermoelectrical starting mechanism BAT, which contains two thermal fuses Tf1 and Tf2, is a part of the actuating mechanism. These fuses are activated when temperature +72 °C has been exceeded (the fuse Tf1 when the temperature around the damper and the fuses Tf2 when the temperature inside the air-conditioning piping has been exceeded). After the thermal fuse Tf1 or Tf2 has been activated, the power supply is permanently and irreversibly cut off and the actuating mechanism, by means of the pre-stretched spring, displaces the damper blade into the breakdown position "CLOSED".

Signalisation of damper blade position "OPEN" a "CLOSE" is provided by two limit switches.

Fig. 2 Fire damper FDMC - actuating mechanism

Fig. 3 Actuating mechanism BELIMO BFL, BFN 230-T

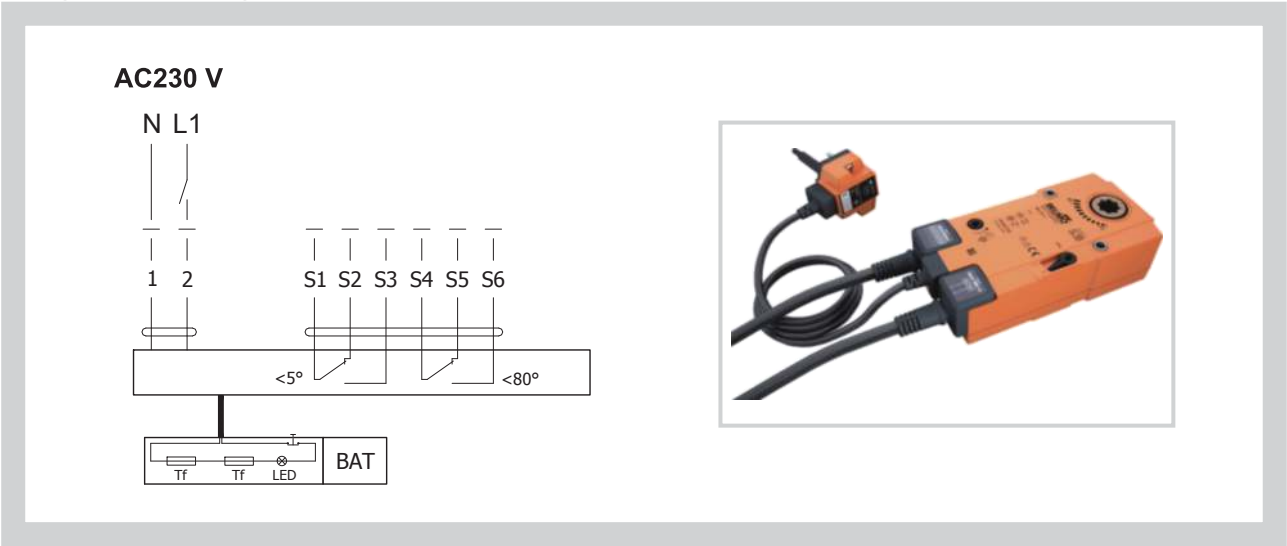

Fig. 4 Actuating mechanism BELIMO BFL, BFN 24-T(-ST)

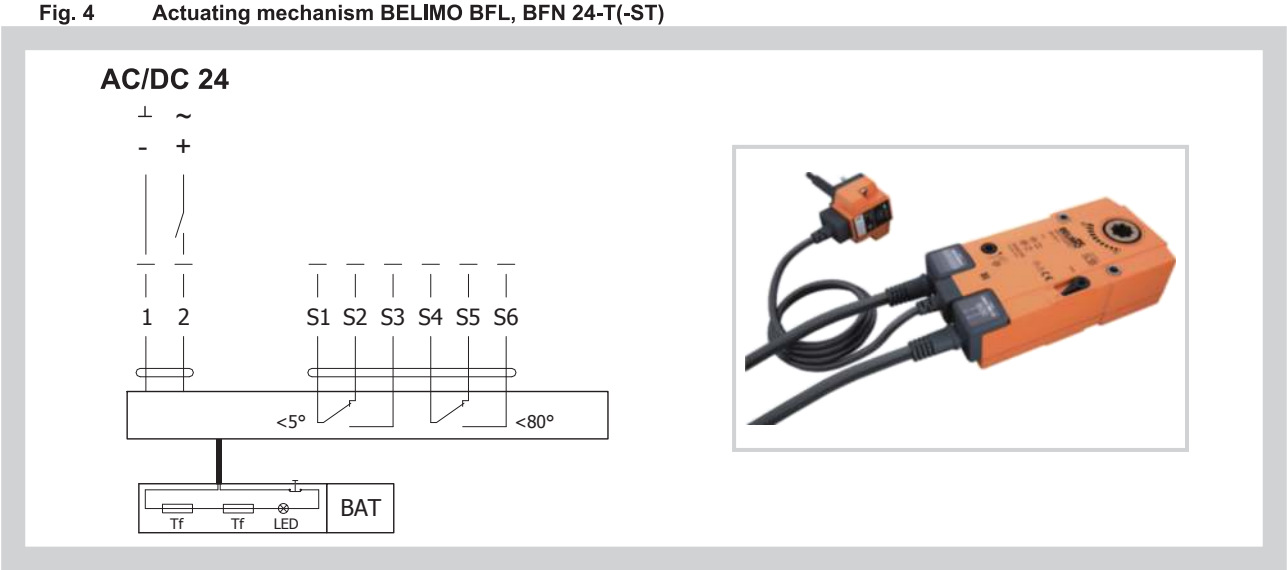

Tab. 2.1.1. Actuating mechanism BELIMO BFL24-T(-ST), BFN 24-T(-ST), BFL 230-T a BFN 230-T

Actuating mechanism BELIMO	BFL, BFN 230-T	BFL, BFN 24-T(-ST)
Nominal voltage	AC 230 V 50/60 Hz	AC 24 V 50/60 Hz DC 24 V
Power consumption - motoring - holding	3,5/5 W 1,1/2,1 W	2,5/4 W 0,8/1,4 W
Dimensioning	6,5/10 VA (Imax 4 A @ 5 ms)	4/6 VA (Imax 8,3 A @ 5 ms)
Protection class	II	III
Degree of protection	IP 54	
Running time - motor - spring return	<60 s ~ 20 s	
Ambient temperature - normal duty - safety duty - non-operating temperature	- 30°C … +55°C The safe position will be attained up to max. +75°C - 40°C … +55°C	
Connecting - motor - auxiliary switch	cable 1 m, 2 x 0,75 mm² (BFL/BFN 24-T-ST) with 3-pin plug-in connectors cable 1 m, 6 x 0,75 mm² (BFL/BFN 24-T-ST) with 6-pin plug-in connectors	
Thermal trips	duct outside temperature +72°C duct inside temperature +72°C	

2.2. Design with the communication and supply device

Design .60

Design with the communication and supply device BKN 230-24 and the actuating mechanism BFL 24-T-ST. It simplifies electrical wiring and interconnection of fire damper. It facilitates on site check and enables central control and checks of fire damper by means of a simple 2-conductor wiring.
BKN 230-24 functions as a decentralized network device for supplying the actuating mechanism BFL 24-T-ST with a spring back drive on one hand and on the other hand it transmits the signal information about the fire damper position OPERATION and FAILURE through 2-conductor wiring to the central. Control command SWITCHED ON - SWITCHED OFF from the central through BKN 230-24 goes through the same wiring to the actuating mechanism.
To simplify the connection, the actuating mechanism BFL 24-T-ST is equipped with connecting plugs that are inserted directly to BKN 230-24. BKN 230-24 is supplied with a conductor and an EURO plug to be connected to the 230V mains.
2- conductor wiring is connected to BKN 230-24 by means of terminals 6 and 7.
If the drive is supposed to be controlled without any signal from the central, it can be switched on by means of a bridge between the terminals 3 and 4. A green LED pilot light on BKN 230-24 is on when voltage is present in the drive (AC 24V). If the button on BAT72B-S is switched on or if the power supply (e.g. by a signal from ELECTRICAL FIRE SIGNALISATION) is disconnected, the fire damper position will be "FAILURE".
Communication and supply device BKN 230-24 has to be placed near the damper. It is necessary for easy connection of actuating system equipped by BKN 230-24 device.

Fig. 5 Fire damper FDMD with actuating mechanism and BKN

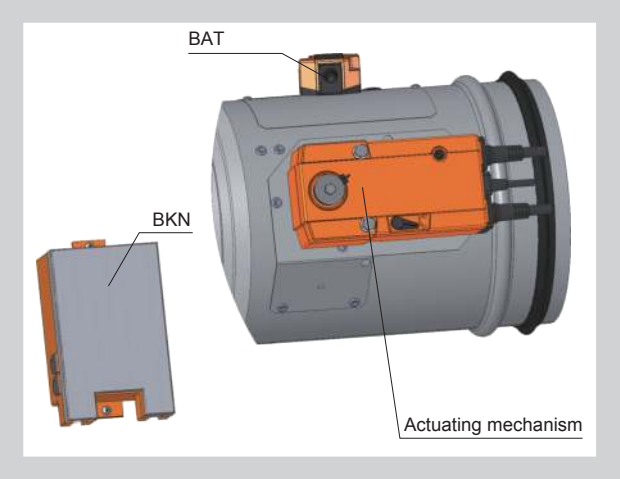

Tab. 2.2.1. Communication and Supply Device BKN 230-24

Communication and Supply Device	BKN 230-24
Nominal voltage	AC 230V 50/60Hz
Power consumption	3,5 W (operating position)
Dimensioning	11 VA (including actuating mechanism)
Protection Class	II
Degree of protection	IP 42
Ambient Temperature Storage Temperature	- 30 °C … + 50 °C - 40 °C … + 50 °C
Connection - mains - drive - terminal board	Cable 0,9 m with EURO plug of 26 type 6 pole plug, 3 pole plug screw terminals for conductor 2x1,5 mm²

Tab. 2.2.2. Communication and Supply Device BKN 230-24

Communication and Supply Device	BKN 230-24
Nominal voltage	AC 230V 50/60Hz
Power consumption	3,5 W (operating position)
Dimensioning	11 VA (including actuating mechanism)
Protection Class	II
Degree of protection	IP 42
Ambient Temperature Storage Temperature	- 30 °C … + 50 °C - 40 °C … + 50 °C
Connection - mains - drive - terminal board	Cable 0,9 m with EURO plug of 26 type 6 pole plug, 3 pole plug screw terminals for conductor 2x1,5 mm²

Fig. 6 Communication and supply device BKN 230-24, with act. mechanism BFL 24-T-ST, BFN 24-T-ST

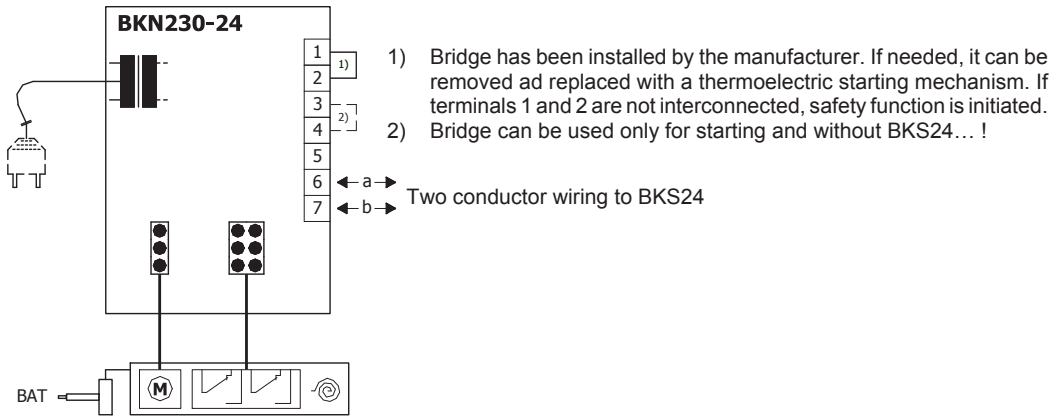

3. Communication and control devices

3.1. BKS 24-9A communication and control device is used for group control and checks of 1 to 9 fire dampers with the actuating mechanism BFL 24-T-ST in connection with the supply and communication device BKN 230-24. Signalisation of the damper position is individual; the dampers can be controlled and tested only as a group. BKS 24-9A is intended for use in the distribution board and displays the operation situations and failure reports of the connected fire dampers. It is possible to signalise functions such as the damper position and failure reports or to transmit them further to the system by means of integrated auxiliary switches. BKS 24-9A receives signals from BKN 230-24 through the two-conductor wiring and issues control commands. Proper damper operation is indicated by two light LED diodes:

Control ON = position OPERATION
Control OFF = position FAILURE

If the fire dampers do not reach the given position in time tolerable for displacing, the appropriate light diode FAILURE starts to flash and K1 contact is opened (current failure). In case that the faulty damper finally reaches its given position, K1 is closed and the failure report lights up shines (the failure is saved in memory).
K2 - the auxiliary contact - is used for signalisation of the flap position to the master device. Function of this auxiliary contact can be programmed through the terminal 14 according to the Tab. 3.1.1.

Tab. 3.1.1. BKS 24 -9A contacts K1 and K2

K1 Function Contact		Programming K2 Auxiliary Contact		
Situation	**State**	**Function**	**Interconnection**	**State**
Current Failure	15 — 16	K2 contact is on if all the damperss are open	14 — 11	17 — 18
		K2 contact is on if the damper No. 1 is open	14 — 12	
No Failure	15 — 16	K2 contact is on if all the dampers are closed	14 open	

Function check can be done in the position OPERATION by means of pushing the TEST button. While the button is pushed, the flap blade is turning into the position FAILURE. Fault function is indicated by a report "FAILURE".

Tab. 3.1.2. Communication and Control Device BKS 24-9A

Communication and Control Device	BKS 24-9A
Nominal voltage	AC 24 V 50/60Hz
Power consumption	3,5 W (operating position)
Dimensioning	5,5 VA
Protection Class	III (safe small voltage)
Degree of protection	IP 30
Ambient Temperature	0 … + 50 °C
Connection	Terminals for conductor 2 x 1,5 mm²

Fig. 7 Communication and Control Device BKS 24-9A

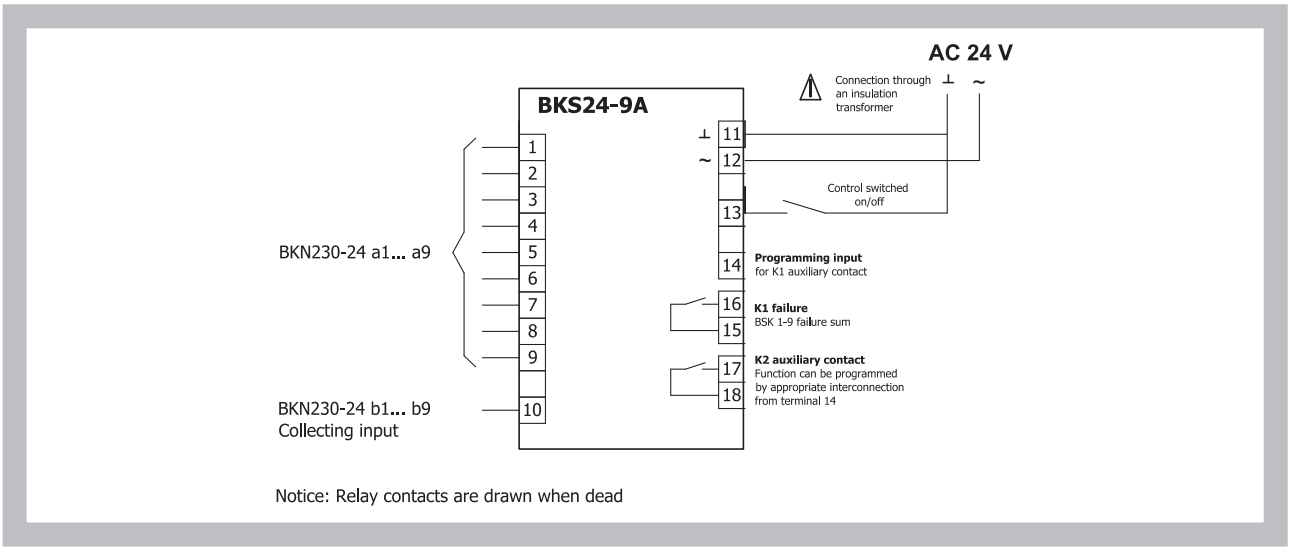

3.2. BKS 24-1B communication and control device is used for control and checks of fire dampers with the BFL 24-T-ST actuating mechanism in conjunction with the BKN 230-24 supply and communication device. BKS 24-1B receives information about the situation of the fire damper through the BKN 230-24 supply and communication device and issues controlling commands. The device is intended for building in into the distribution board. Light diodes on the front side of the device indicates the operating situations of the damper and breakdowns of the whole system. Nonpotential auxiliary contacts enable connection to the master control system (indication of the damper position, failure reports, release of the ventilators etc.).

While a flashing green LED pilot light signalises flap blade motion towards the given position, the same pilot light reports reaching the required position when shining constantly. If the damper, with respect to the given time, does not reach the required position, then a red LED pilot light starts to flash and at the same time, the failure contact is active. Once the damper blade reaches the given position, this contact is deactivated. The LED pilot light keeps flashing unless the failure is unblocked by means of the RESET button.

Tab. 3.2.1. Communication and Control Device BKS 24-1B

Communication and Control Device	**BKS 24-1B**
Nominal voltage	AC 24 V 50/60Hz
Power consumption	2,5 W (operating position)
Dimensioning	5 VA
Protection Class	III (safe small voltage)
Degree of protection	IP 30
Ambient Temperature	0 … + 50 °C
Connection	Into ZSO-11 connector which is not a part of BKS 24-1B. ZSO-11 connector has screw terminals 11 x 1,5 mm²

Fig. 8 Communication and control device BKS 24-1B

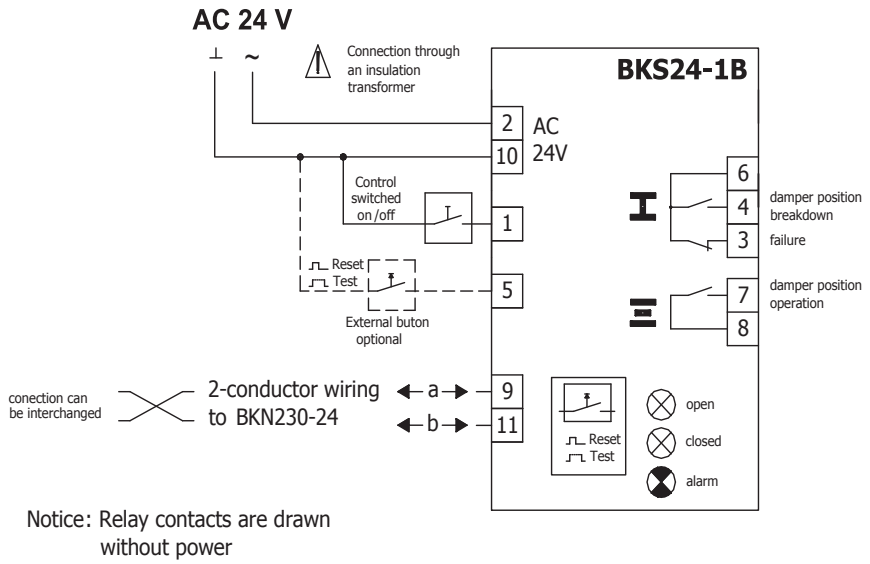

Signals and diagnosis				
light diodes			contacts	Description
open	closed	alarm	state	Cause/Course
closed	closed	closed	6–3	**Power supply AC 24V** not available
open	open	open	6–3	**Check test cca 35sec**, starting with switching AC 24 on or pressing «Reset/Test» button
closed	closed	flashing	6–3	**Current failure,** possible cause: • short circuit or interruption of 2-conductor wiring or damper failure (at BKN..) • Power supply AC 230V missing • defective thermoelectrical starting • smoke detector activated • exceeded operation time • damper blocked
closed	closed	open	6–3	**Failure saved in memory** • Fault in system signalled, system check should be done
closed	flashing	closed	6–4	Damper (drive) turning into **the direction** of breakdown position
closed	open	closed	6–4	Damper (drive) in **breakdown position** I
flashing	closed	closed	6–7	Damper (drive) turning into **the direction** of operating position
open	closed	closed	6–7	Damper (drive) in **operating position** II

4. Dimensions, weights

4.1. Dimensions

Fig. 9 Fire damper FDMC, design with actuating mechanism

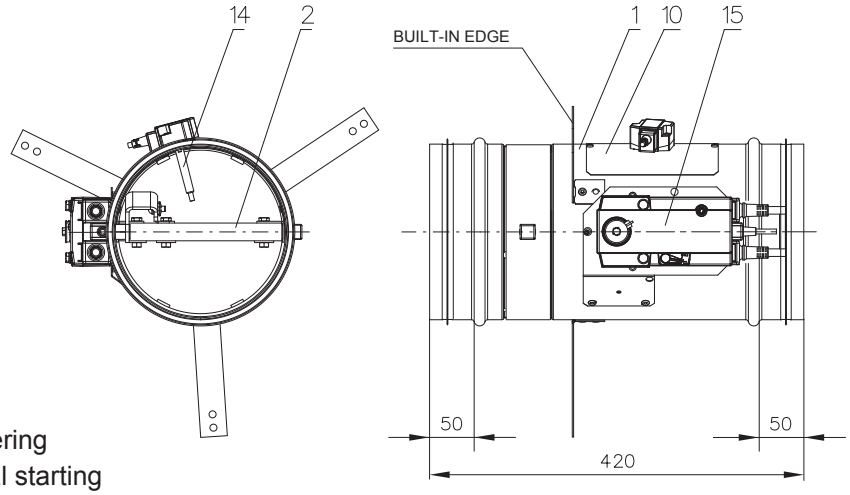

Position:

1 Damper casing
2 Damper blade
10 Inspection hole covering
14 BAT thermoelectrical starting mechanism
15 Actuating mechanism

4.2. Weight and effective area

Tab. 4.2.1. Weight and effective area

Size ⌀D	a	Weight	Effective area S_{ef} [m] ²	Actuating mechanism
100	-	3,1	0,0036	BFL
125	-	3,4	0,0068	BFL
140	-	3,6	0,0092	BFL
150	-	3,7	0,0109	BFL
160	-	3,8	0,0129	BFL
180	-	4,1	0,0172	BFL
200	-	4,4	0,0222	BFL
225	-	4,7	0,0293	BFL
250	9	5,5	0,0374	BFL
280	24	6,0	0,0484	BFL
315	41,5	6,6	0,0630	BFL
350	59	7,0	0,0793	BFL
355	61,5	7,3	0,0821	BFL
400	84	8,2	0,1065	BFL

4.3. Blades overlaps

Tab. 4.3.1 Blades overlaps

Blades overlaps		Dimension	Overlaps
FDMC Fig. 10	Side without act. mechanism	"a"	Tab. 4.2.1

These values has to be respected when projecting related air-conditioning ducts.

Fig. 10 Blades overlaps

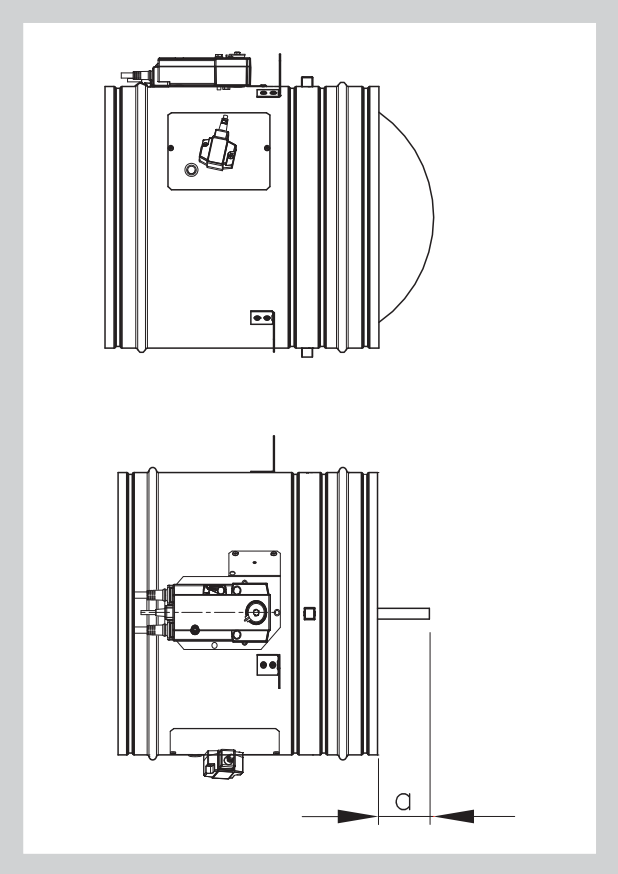

5. Placement and Assembly

5.1. Fire dampers are suitable for installation in arbitrary position in vertical and horizontal passages of fire separating constructions. Damper assembly procedures must be done so as all load transfer from the fire separating constructions to the damper body is absolutely excluded. Back-to-back air-conditioning piping must be hung or supported so as all load transfer from the back-to-back piping to the damper is absolutely excluded. Installation gap must be filled by approved material perfectly in all the installation space volume (installation gap).

To provide needed access space to the control device, all other objects must be situated at least 350 mm from the control parts of the damper. Inspection hole must be accessible.

Damper blade has to be inside of construction (labelled with BUILD IN EDGE on the damper body) after installation. The fire damper can also be installed outside the wall construction. Duct and the damper part between the wall construction and the damper blade (labelled with BUILD IN EDGE on the protective covering) must be protected with firefighting insulation (see fig. 12).

The distance between the fire damper and the construction (wall, ceiling) must be minimal in range from 10 to 50 mm. In case that two or more dampers are supposed to be installed in one fire separating construction, the distance between the adjacent dampers must be at least 50 mm.

Exceptions are given in chapter 6.

Fig. 11 The distance between the fire damper and the construction

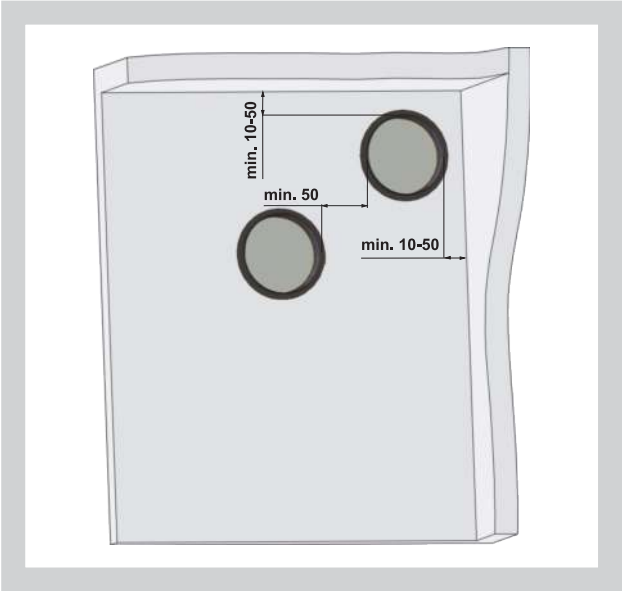

Fig. 12 Built-in edge - design with outer mechanical control or actuating mechanism

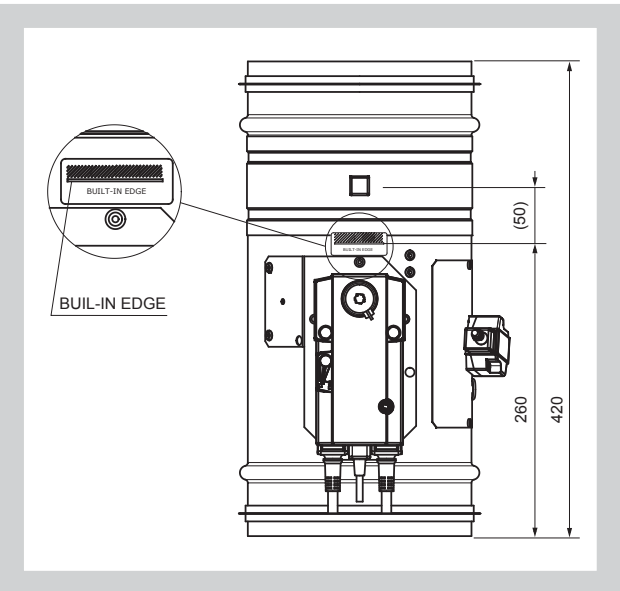

5.2. The control mechanism has to be protected (covered) against damage and pollution during installation process. All fire dampers has to be closed during installation process. The damper body should not be deformed in the course of bricking in. Once the damper is built in, its blade should not grind on the damper body during opening or closing.

5.3. Installation opening dimensions (see Fig. 13-14)

Fig. 13 Installation opening

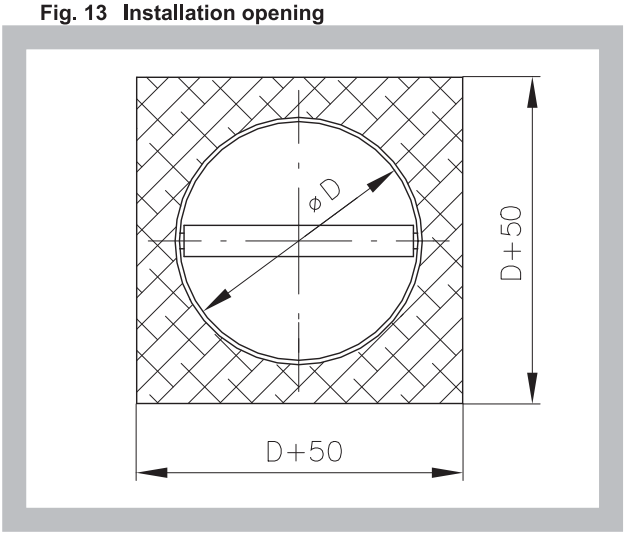

Fig. 14 Installation opening

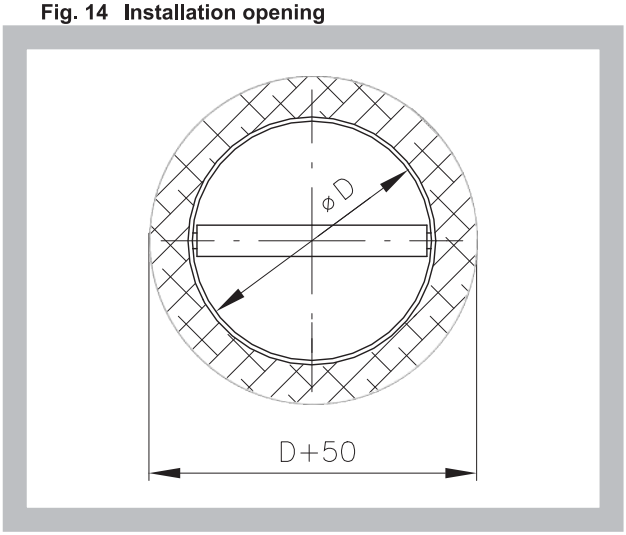

5.4. The control mechanism has to be protected (covered) against damage and pollution during installation process.

All fire dampers has to be closed during installation process. The damper body should not be deformed in the course of bricking in. Once the damper is built in, its blade should not grind on the damper body during opening or closing.

6. Statement of installations

6.1. Statement of installations the fire dampers FDMC and their fire resistance Tab. 6.1.1.

Tab. 6.1.1. Statement of installations

Fire separating construction	Wall/Ceiling Min. thickness [mm]	Installation	Fire resistance	Page
Solid wall construction	100	Mortar or gypsum	EIS 60	14
	100	Stuffing box + mastic and cement lime plate	EIS 60	14
	100	Installation next to wall - mortar or gypsum and mineral wool	EIS 60	15
Solid ceiling construction	110	Mortar or gypsum	EIS 60	16
	110	Stuffing box + mastic and cement lime plate	EIS 60	16
Gypsum wall construction	100	Mortar or gypsum	EIS 60	17
	100	Stuffing box + mastic and cement lime plate	EIS 60	17
	100	Installation next to wall - mortar or gypsum and mineral wool	EIS 60	18

Fig. 15 Solid wall construction - mortar or gypsum

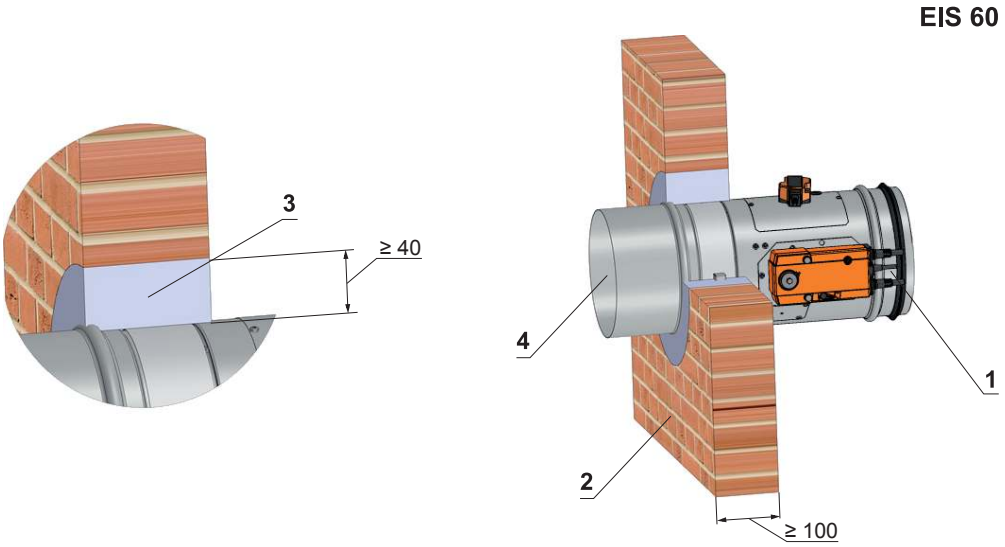

POSITION:

1 Fire damper FDMC

2 Solid wall construction

3 Mortar or gypsum

4 Duct

Fig. 16 Solid wall construction - stuffing box and fire protection mastic

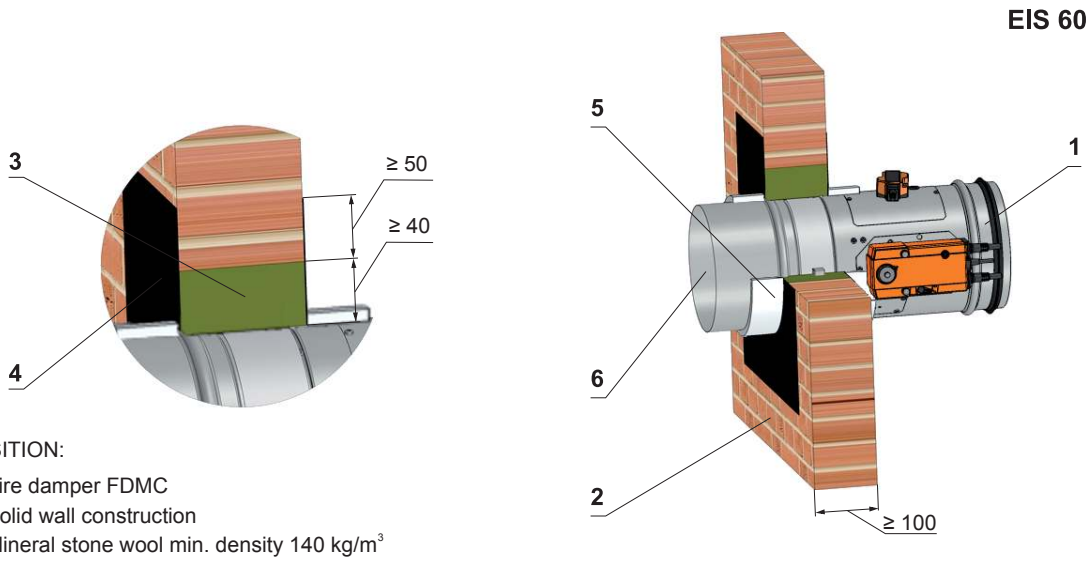

POSITION:

1 Fire damper FDMC
2 Solid wall construction
3 Mineral stone wool min. density 140 kg/m^3
4 Fire protection mastic min. thickness 1 mm
5 Glass fiber felt with aluminium foil width 50 mm, thickness 5 mm
6 Duct

Used materials - example*:

3 - Promapyr, Rockwool Steprock HD
4 - Promastop - P, K

* Stuffing box and fire protection mastic can be replaced by another approved fire sealing system for damper installation with equivalent material properties.

Fig. 17 Solid wall construction - installation next to wall, ceiling - mortar or gypsum and mineral wool

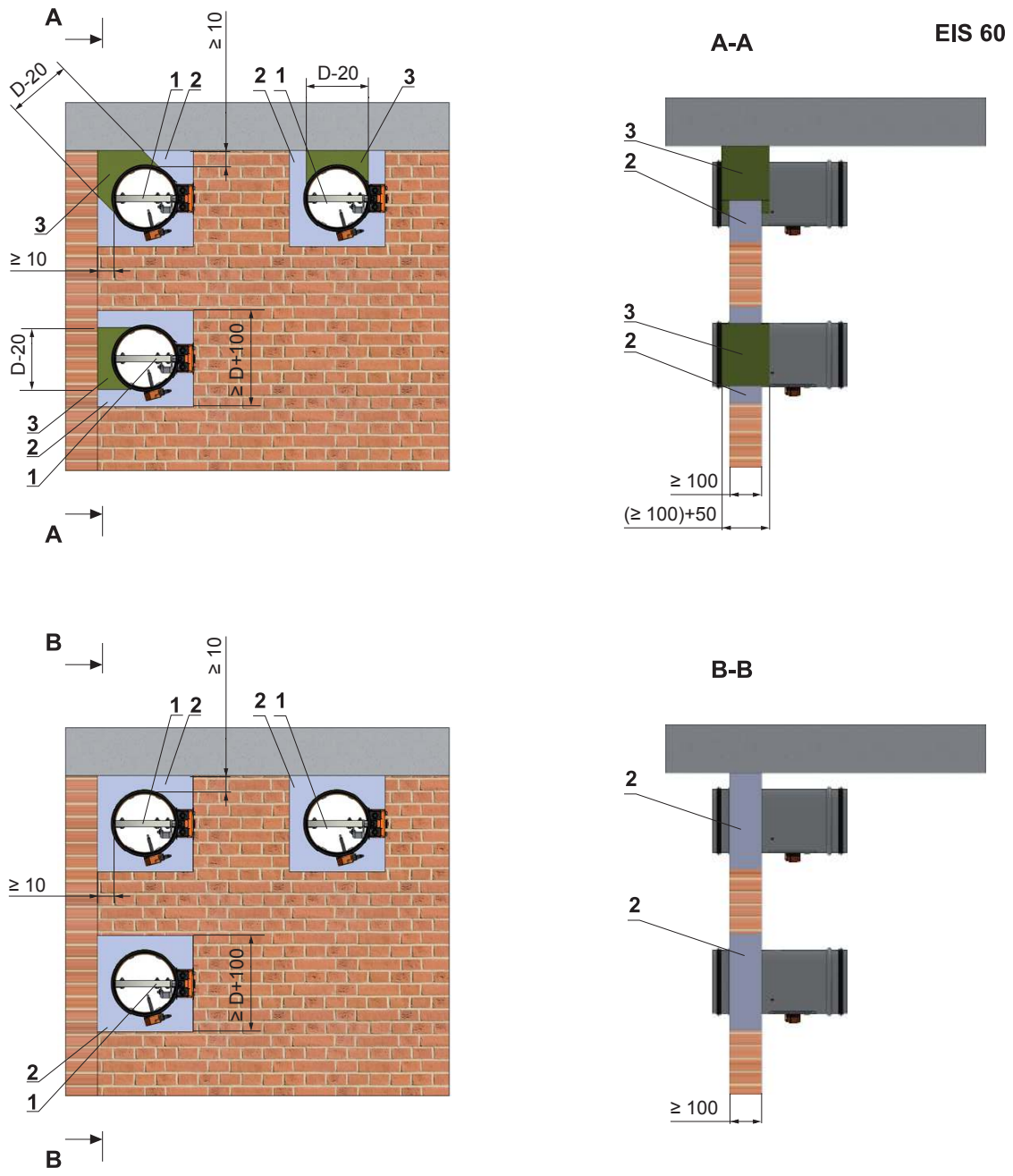

POSITION:

1 Fire damper FDMC
2 Mortar or gypsum
3 Mineral stone wool min. density 140 kg/m³

Notice:

- Gap between damper and construction is filled by mortar or gypsum and mineral wool
- Wool is fixed to damper body and construction by fire protection mastic.
- Mineral wool thickness = construction thickness + 50 mm
- Installation is valid for ceiling construction

Fig. 18 Solid ceiling construction - mortar or gypsum

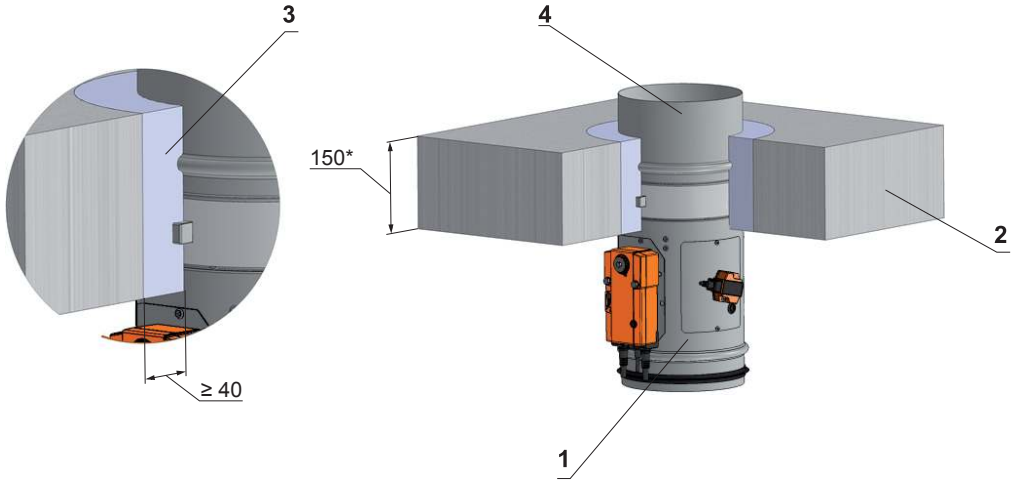

POSITION:

1 Fire damper FDMC
2 Solid ceiling construction
3 Mortar or gypsum
4 Duct

* min. 110 - Concrete/ min. 125 - Aerated concrete

Fig. 19 Solid ceiling construction - stuffing box and fire protection mastic

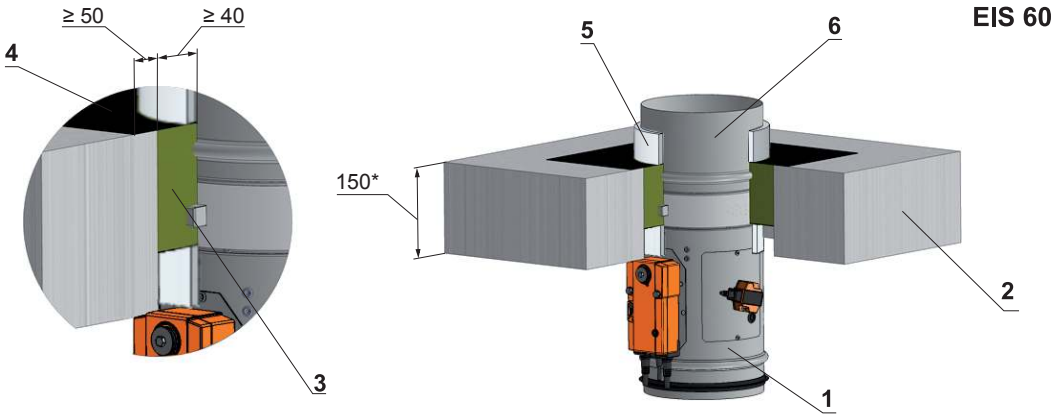

POSITION:

1 Fire damper FDMC
2 Solid ceiling construction
3 Mineral stone wool min. density 140 kg/m^3
4 Fire protection mastic min. thickness 1 mm
5 Glass fiber felt with aluminium foil width 50 mm, thickness 5 mm
6 Duct

* min. 110 - Concrete/ min. 125 - Aerated concrete

Used materials - example**:

2 - Promapyr, Rockwool Steprock HD
3 - Promastop - P, K

** Stuffing box and fire protection mastic can be replaced by another approved fire sealing system for damper installation with equivalent material properties.

Fig. 20 Gypsum wall construction - mortar or gypsum

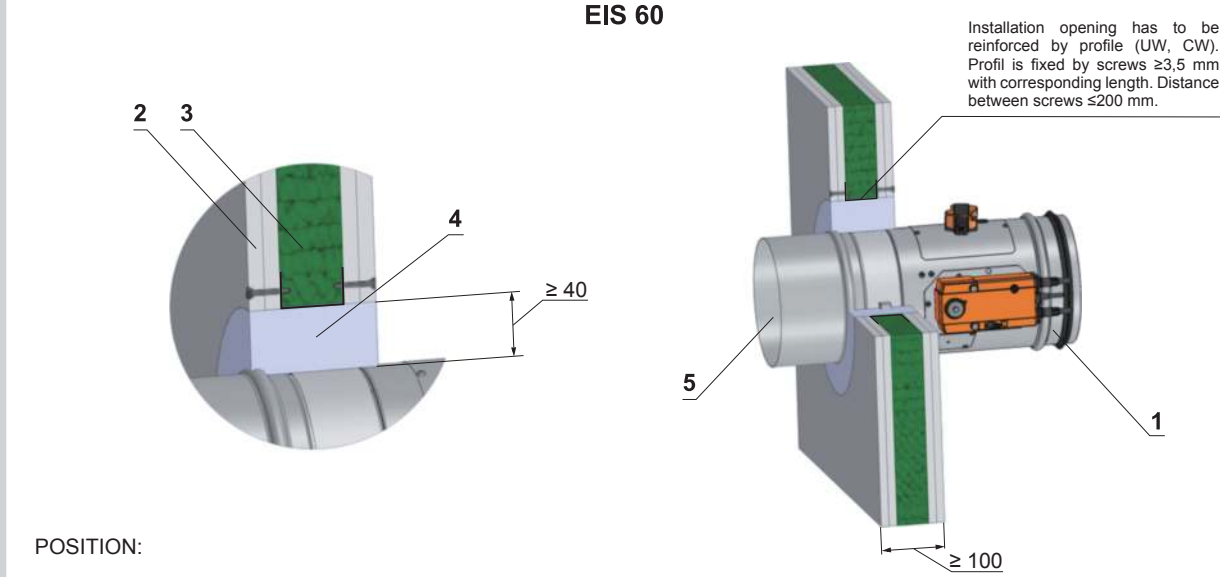

POSITION:

1 Fire damper FDMC

2 Gypsum plate

3 Mineral wool (type depending on the type of construction)

4 Mortar or gypsum

5 Duct

Fig. 21 Gypsum wall construction - stuffing box and fire protection mastic

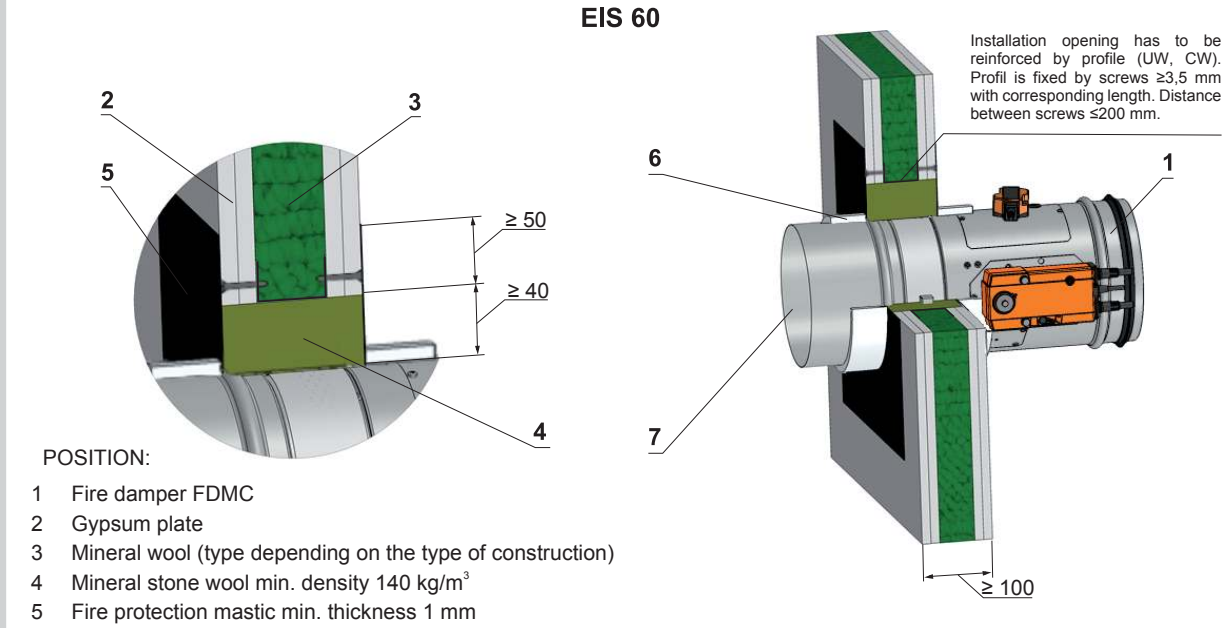

POSITION:

1 Fire damper FDMC

2 Gypsum plate

3 Mineral wool (type depending on the type of construction)

4 Mineral stone wool min. density 140 kg/m^3

5 Fire protection mastic min. thickness 1 mm

6 Glass fiber felt with aluminium foil width 50 mm, thickness 5 mm

7 Duct

Used materials - example*:

4 - Promapyr, Rockwool Steprock HD

5 - Promastop - P, K

* Stuffing box and fire protection mastic can be replaced by another approved fire sealing system for damper installation with equivalent material properties.

Fig.. 22 Gypsum wall construction - installation next to wall, ceiling - mortar or gypsum and mineral wool

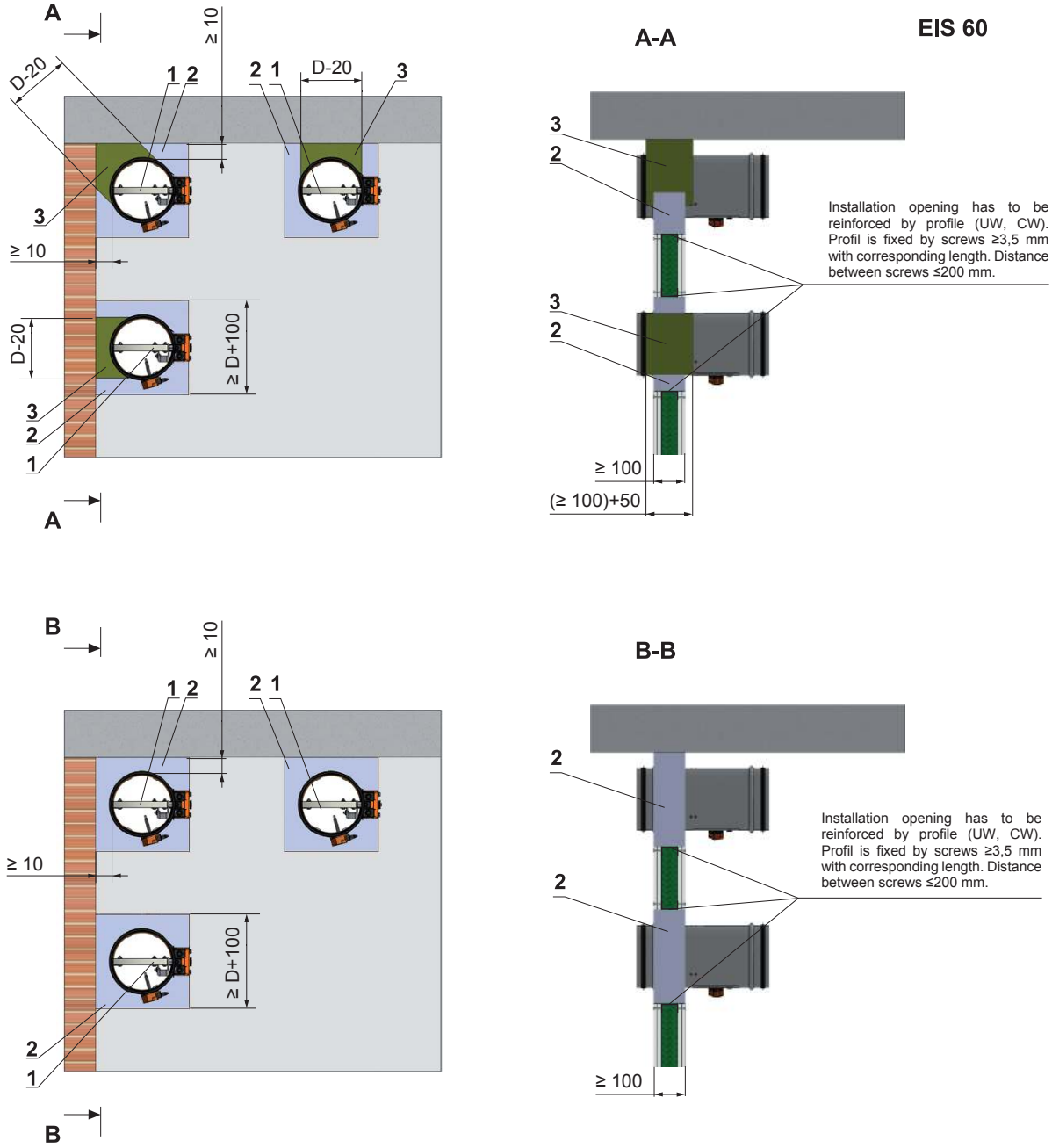

POSITION:

1 Fire damper FDMC
2 Mortar or gypsum
3 Mineral stone wool min. density 140 kg/m³

Notice:

- Gap between damper and construction is filled by mortar or gypsum and mineral wool
- Wool is fixed to damper body and construction by fire protection mastic.
- Mineral wool thickness = construction thickness + 50 mm
- Installation is valid for ceiling construction

7. Suspension systems

7.1. Mounting to the ceiling wall

Fig. 23 Mounting to the ceiling wall

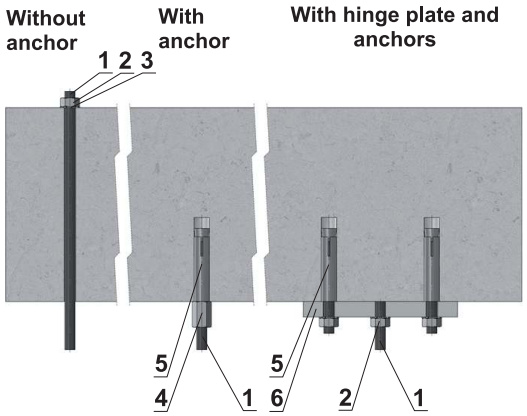

Hinge plates

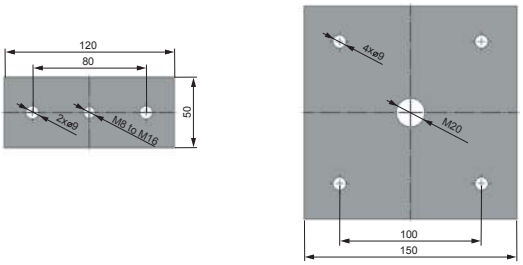

Position:

1 Threaded rod M8 – M20
2 Nut
3 Washer
4 Coupling Nut
5 Anchor
6 Hinge plate - min. thickness 10 mm

Load capacities of threaded hanger rods F [N] at the required fire resistance 90 minutes

Size	A_s [mm^2]	Weight G [kg]	
		for 1 piece	for 1 pair
M8	36,6	22	44
M10	58,0	35	70
M12	843	52	104
M14	115	70	140
M16	157	96	192
M18	192	117	234
M20	245	150	300

7.2. Horizontal installation

Fire dampers can be suspended by using threaded rods and a mounting profiles. Load the suspension system depend on weight of the fire damper.

Damper assembly procedures must be done so as all load transfer from the fire separating constructions to the damper body is absolutely excluded. Back-to-back air-conditioning piping must be hung or supported so as all load transfer from the back-to-back piping to the damper is absolutely excluded.

Threaded rods longer than 1,5 m require fire-resistant insulation.

Threaded rod fixing to the ceiling construction - see fig. 23

Fig. 24 Suspension - horizontal duct

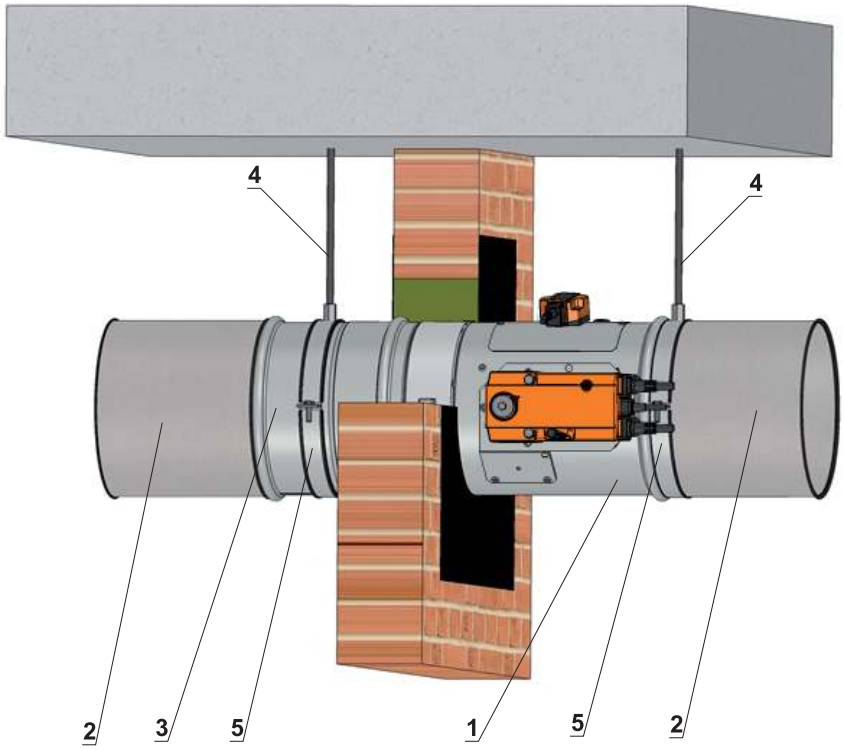

Position:

1 Fire damper
2 Damping pad
3 Extension piece
4 Threaded rod
5 Suspension ring

Examples of using materials: **HILTI, SIKLA, MÜPRO etc.**

7.3. Vertical installation

Fire dampers can be suspended by using threaded rods and a mounting profiles.
Load the suspension system depend on weight of the fire damper.

Damper can be suspended from the ceiling construction or supported above the ceiling construction. Damper assembly procedures must be done so as all load transfer from the fire separating constructions to the damper body is absolutely excluded. Back-to-back air-conditioning piping must be hung or supported so as all load transfer from the back-to-back piping to the damper is absolutely excluded.

Threaded rods longer than 1,5 m require fire-resistant insulation.

Fig. 25 Suspension - vertical duct

Actuating mechanism is placed above the ceiling construction

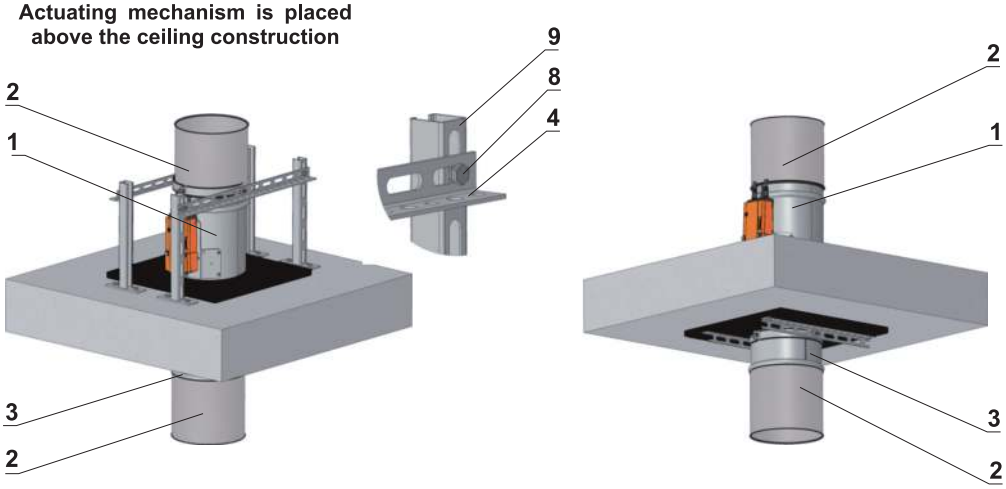

Actuating mechanism is placed under the ceiling construction

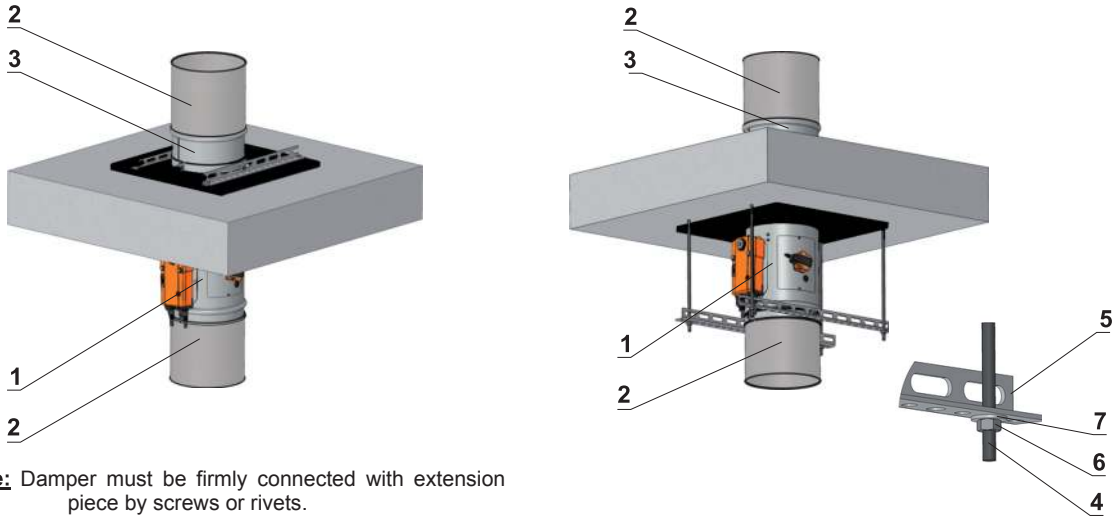

Notice: Damper must be firmly connected with extension piece by screws or rivets.

Suspension ring and mounting rail connected by bolt

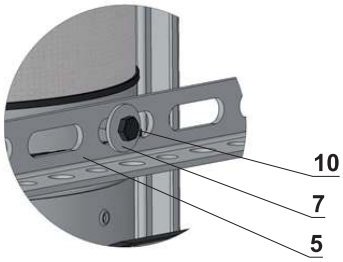

Suspension ring and mounting rail connected by screw or rivet

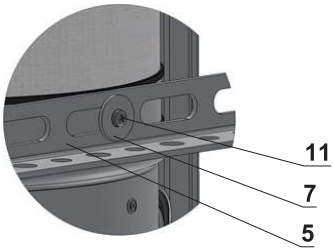

Position:

1	Fire damper
2	Damping pad
3	Extension piece
4	Threaded rod
5	Mounting rail
6	Nut
7	Washer
8	Screw connection
9	Mounting profile
10	Bolt
11	Screw or rivet

III. TECHNICAL DATA

8. Pressure loss

8.1. Pressure loss calculation

$$\Delta p = \xi \cdot \rho \cdot \frac{w^2}{2}$$

Δp	[Pa]	presure loss
w	[m.s^{-1}]	air flow speed in nominal damper section
ρ	[kg.m^{-3}]	air density
ξ	[-]	coefficient of local pressure loss for the nominal damper section (see Tab. 8.2.1.)

8.2. Determination of pressure loss by using diagram 8.2.1. ρ = 1,2 kg.m^{-3}

Diagram 8.2.1. Pressure losses for air density ρ =1,2 kg.m^{-3}

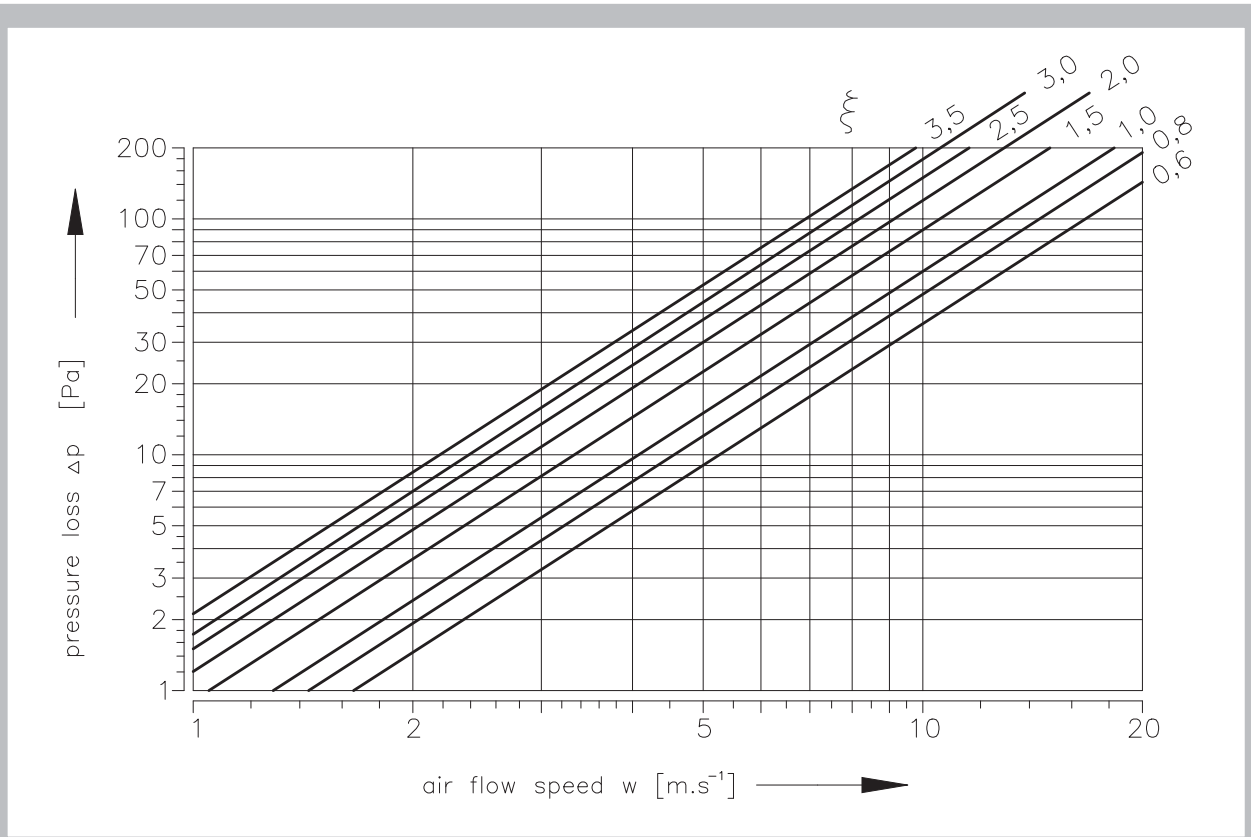

9. Coefficient of local pressure loss

9.1. Coefficient of local pressure loss ξ (-)

Tab. 9.1.1. Coefficient of local pressure loss

D	100	125	140	150	160	180	200	225	250	280	315	350	355	400
ξ	2,736	2,099	1,781	1,527	1,272	0,929	0,636	0,477	0,344	0,237	0,159	0,125	0,116	0,085

10. Noise data

10.1. Level of acoustic output corrected with filter A.

$$L_{WA} = L_{W1} + 10 \log(S) + K_A$$

L_{WA}	[dB(A)]	level of acoustic output corrected with filter A
L_{W1}	[dB]	level of acoustic output L_{W1} related to the 1 m² section (see Tab. 10.3.1.)
S	[m²]	duct cross section
K_A	[dB]	correction to the weight filter A (see Tab. 10.3.2.)

10.2. Level of acoustic output in octave ranges.

$$L_{Woct} = L_{W1} + 10 \log(S) + L_{rel}$$

L_{Woct}	[dB]	spectrum of acoustic output in octave range
L_{W1}	[dB]	level of acoustic output L_{W1} related to the 1 m² section (see Tab. 10.3.1.)
S	[m²]	duct cross section
L_{rel}	[dB]	relative level expressing the shape of the spectrum (see Tab. 10.3.3.)

10.3. Table of acoustics values

Tab. 10.3.1. Level of acoustic output L_{W1} related to the 1 m² section

	ξ [-]											
w [m.s⁻¹]	**0,1**	**0,2**	**0,3**	**0,4**	**0,6**	**0,8**	**1,0**	**1,5**	**2,0**	**2,5**	**3,0**	**3,5**
2	9,0	11,5	14,7	16,9	20,1	22,3	24,1	27,2	29,4	31,2	32,6	33,8
3	16,7	22,1	25,3	27,5	30,7	32,9	34,6	37,8	40,0	41,7	43,2	44,4
4	24,2	29,6	32,8	35,0	38,1	40,4	42,1	45,3	47,5	49,2	50,7	51,9
5	30,0	35,4	38,6	40,8	44,0	46,2	47,9	51,1	53,3	55,1	56,5	57,7
6	34,8	40,2	43,3	45,6	48,7	51,0	52,7	55,8	58,1	59,8	61,2	62,4
7	38,8	44,2	47,3	49,6	52,7	55,0	56,7	59,9	62,1	63,8	65,2	66,4
8	42,3	47,7	50,8	53,1	56,2	58,4	60,2	63,3	65,6	67,3	68,7	69,9
9	45,4	50,7	53,9	56,1	59,3	61,5	63,3	66,4	68,6	70,4	71,8	73,0
10	48,1	53,5	56,6	58,9	62,0	64,3	66,0	69,1	71,4	73,1	74,5	75,7
11	50,6	56,0	59,1	61,4	64,5	66,7	68,5	71,6	73,9	75,6	77,0	78,2
12	52,8	58,2	61,4	63,6	66,8	69,0	70,7	73,9	76,1	77,9	79,3	80,5

Tab. 10.3.2. Correction to the weight filter A

w [m.s⁻¹]	**2**	**3**	**4**	**5**	**6**	**7**	**8**	**9**	**10**	**11**	**12**
K_A [dB]	-15,0	-11,8	-9,8	-8,4	-7,3	-6,4	-5,7	-5,0	-4,5	-4,0	-3,6

Tab. 10.3.3. Relative level expressing the shape of the spectrum L_{rel}

	f [Hz]							
w [m.s^{-1}]	**63**	**125**	**250**	**500**	**1000**	**2000**	**4000**	**8000**
2	-4,5	-6,9	-10,9	-16,7	-24,1	-33,2	-43,9	-56,4
3	-3,9	-5,3	-8,4	-13,1	-19,5	-27,6	-37,4	-48,9
4	-3,9	-4,5	-6,9	-10,9	-16,7	-24,1	-33,2	-43,9
5	-4,0	-4,1	-5,9	-9,4	-14,6	-21,5	-30,0	-40,3
6	-4,2	-3,9	-5,3	-8,4	-13,1	-19,5	-27,6	-37,4
7	-4,5	-3,9	-4,9	-7,5	-11,9	-17,9	-25,7	-35,1
8	-4,9	-3,9	-4,5	-6,9	-10,9	-16,7	-24,1	-33,2
9	-5,2	-3,9	-4,3	-6,4	-10,1	-15,6	-22,7	-31,5
10	-5,5	-4,0	-4,1	-5,9	-9,4	-14,6	-21,5	-30,0
11	-5,9	-4,1	-4,0	-5,6	-8,9	-13,8	-20,4	-28,8
12	-6,2	-4,3	-3,9	-5,3	-8,4	-13,1	-19,5	-27,6

Fig. 26 Calculation example

Given data:	Fire damper FDMC 250
	$\dot{V}$ = 1000 m³.h
	ρ = 1,2 kg.m^{-3}
	Octave range 1000 Hz
Tab. 4.2.1.	S_{ef} = 0,0374 m²
Calculation:	w [m.s^{-1}] = ($\dot{V}$ [m³.h] / 3600) / S_{ef} [m²]
	w = 7,43 m.s^{-1}
Tab.9.1.1.	ξ = 0,344
Calculation:	$\Delta p = \xi . \rho . (w/2)$ = 0,344 . 1,2 . (7,43/2) = 11,4 Pa
Tab. 10.3.1., Tab. 10.3.2. a Tab. 10.3.3.	L_{W1} = 48,8 dB
	K_A = - 6,1 dB
	L_{rel} = -11,5 dB (pro 1000 Hz)
Calculation:	$L_{WA} = L_{W1} + 10 \log(S_{ef}) + K_A$ = 48,8 + 10 log(0,0374) - 6,1 = 28,5 dB
	$L_{Woct} = L_{W1} + 10 \log(S_{ef}) + L_{rel}$ = 48,8 + 10 log(0,0374) - 11,5 = 23,1 dB

IV. MATERIAL, FINISHING

11. Material

11.1. Damper bodies are supplied in the design made of galvanized plate without any other surface finishing.

Damper blades are made of fire resistant asbestos free boards made of mineral fibres.

Damper controls are made of galvanized materials with no other surface finish.

Fasteners is galvanized. Fasteners is galvanized.

11.2. According to the customer's requirements, damper body, control, springs and jointing material can be made of stainless material.

V. INSPECTION, TESTING

12. Inspection, testing

12.1. The appliance is constructed and preset by the manufacturer, its operation is dependent on proper installation and adjustment.

VI. TRANSPORTATION AND STORAGE

13. Logistic terms

13.1. Dampers are transported by box freight vehicles without direct weather impact, there must not occur any sharp shocks and ambient temperature must not exceed +40°C. Dampers must be protected against mechanic damages when transported and manipulated. During transportation, the damper blade must be in the "CLOSED" position.

13.2. Dampers are stored indoor in environment without any aggressive vapours, gases or dust. Indoor temperature must be in the range from -30°C to +40°C and maximum relative humidity 95 % (avoid condensation on the damper body). Dampers must be protected against mechanic damages when transported and manipulated.

VII. ASSEMBLY, ATTENDANCE, MAINTENANCE AND REVISIONS

14. Assembly

14.1. Assembly, maintenance and damper function check can be done only by qualified and trained person, i.e. “AUTHORIZED PERSON” according to the manufacturer documentation. All works done on the fire dampers must be done according international and local norms and laws.

14.2. All effective safety standards and directives must be observed during fire damper assembly.

14.3. To ensure reliable fire damper function it is necessary to avoid blocking the closing mechanism and contact surfaces with collected dust, fibre and sticky materials and solvents.

15. Entry into service and revisions

15.1. Before entering the dampers into operation after their assembly and by sequential checks, the following checks must be carried out.

Visual inspection of proper damper integration, inside damper area, damper blade, contact surfaces and silicon sealing.

Inspection hole disassembly: release the covering lid by removing the two screws in the corners of inspection hole. Then remove lid from its original position.

Check of blade displacement into the breakdown position "CLOSED" can be done after cutting off the actuating mechanism supply (e.g. by pressing the RESET button at the thermoelectrical starting mechanism BAT72B-S or cutting off the supply from ELECTRICAL FIRE SIGNALISATION). Check of blade displacement back into the "OPEN" position can be done after restoration of power supply (e.g. By releasing the RESET button or restoration of supply from ELECTRICAL FIRE SIGNALISATION).

15.2. Dampers could be displaced into position “CLOSED” only in case that ventilator, or Air Handling Unit is switched off. The goal is the securing of proper closing and safe function of Fire Damper in case of Fire.

15.3. Manual operation

Without power supply, the damper can be operated manually and fixed in any required position. Release of the locking mechanism can be achieved manually or automatically by applying the supply voltage.

15.4. It is recommended to provide periodical checks, maintenance and service actions on Fire Equipment by Authorized persons schooled by Producer.

15.5. All effective safety standards and directives must be observed during fire damper assembly.

VIII. ORDERING INFORMATION

16. Ordering key

FDMC SL 180 - .40 TPM 083/12

- TPM 083/12 — technical specifications
- .40 — design acc. Tab. 16.1.1.
- 180 — size
- SL — SL - Spiro damper with rubber sealing (Lip Seal)
- FDMC — type

If are requested installation holders it has to be mentioned separately in the order.

Tab. 16.1.1. Dampers design

Dampers design	Additional digit
With actuating mechanism BFL 230-T	.40
With actuating mechanism BFL 24-T	.50
With communication and supply device BKN 230-24 and actuating mechanism BFL 24-T-ST*	.60

*** communication and supply device BKN 230-24 has to be placed near the damper. It is necessary for easy connection of actuating system equipped by BKN 230-24 device.**

IX. DATA OF THE PRODUCT

17. Data label

17.1. Data label is placed on the casing of fire damper.

Fig. 27 Data label

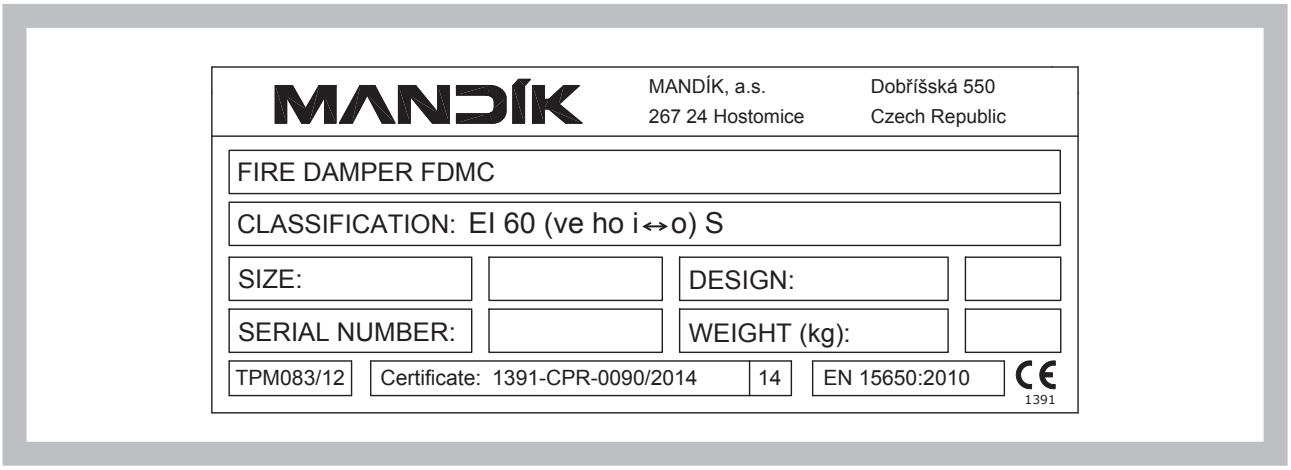

MANDÍK, a.s.
Dobříšská 550
26724 Hostomice
Czech Republic
Tel.: +420 311 706 706
E-Mail: mandik@mandik.cz
www.mandik.cz